TOMCAT®
COMMERCIAL CLEANING EQUIPMENT

RS

Parts Manual (EN)

MODELS:

20'' DISK
26'' DISK
28'' DISK

24'' EDGE
28'' EDGE

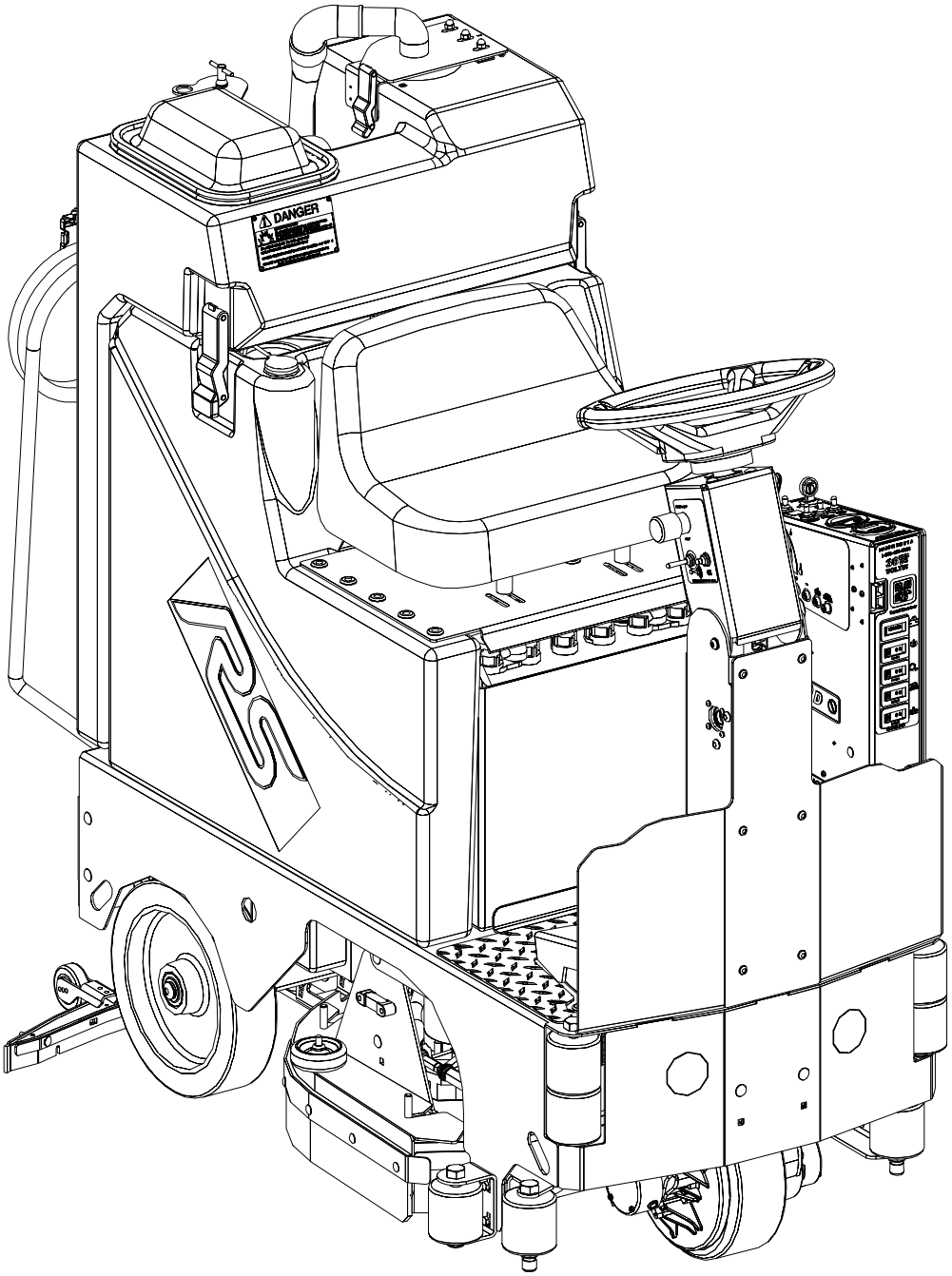

Read the Operators Manual before using the machine.

Read the Safety Messages before servicing machine.

www.tomcatequip.com
1711 South Street
Racine, WI 53404 (USA)
(800) 450-9824 | (+001) 262-681-6470
© 2014 RPS Corporation

VERSION 14.1209
RS-P-EN

Soap Choices 4
10 Inch Front Wheel Assembly 6
Front Wheel, Charger, and Side Rollers 8
Solution Hoses 9
20 Inch Disk Decks 10
26 & 28 Inch Disk Decks 11
26 & 28 Inch Scrubdeck Actuator Lift 12
Disk Deck Shrouds 13
EDGE Deck Lift Arms 14
24 Inch EDGE Deck 15
28 Inch EDGE Deck 16
EDGE Deck Wipers 17
Squeegee Drag Plate 18
Squeegee Trail Arm and Rear Axle 19
Central Command / Steering Upright 20
Central Command 22
Central Command 24
Steering Upright 26
Attaching Tank and Batteries 28
Vacuum Muffler 29
Batteries and Charger Options 30
Solution Tank 31
Recovery Tank 32
Squeegees 33
Common Wear Parts 34

Industrial • Commercial • Environmentally Safe

TRADITIONAL DRUMS / TOTES

DEMO / RENTAL QUARTS

WALL-MOUNTED SUPERCON

ONBOARD AUTO DISPENSING

Onboard Availability

FORMULAS

SUDS Approved

707 Citrus Green An environmentally cleaner that works! It is a solvent free degreaser that works on oil, carbon, even rubber marks. Incorporates the latest technology in “Green Cleaning”.

SUDS Approved

733 Low pH Safe on most surfaces not harmed by water alone. Low scale formula to prevent alkali buildup in cleaning equipment, while offer detergent to emulsify oil.

SUDS Approved

755 High Power Ideal solvent fortified degreaser. This butyl based detergent is penetrating, fast acting, and deep cleaning with built-in corrosion inhibitors. It is our most effective degreaser.

SUDS Approved

757 Gloss A high gloss detergent designed to dry to a bright shine. It is ideal for use on finished surfaces, tile, epoxy, or enamel. The special formula removes salt residue, scuff marks and dirt, while leaving no residue behind. The result is a clean, non-slip surface, ready for immediate use.

SUDS Approved

797 HD The Heavy Duty concentrate is a Super alkaline detergent, formulated for heavy soil, grease, and thick buildup. Popular in machine shops, auto and truck repair, and other facilities with oil, hydraulic fluids and cutting oils.

***Below Sold in bulk concentrate only. Not available as a SuperCon, PowerDose or SUDS product.*

727 Pretreat** Designed to quickly remove tire marks, oil stains and buildup that has accumulated. This pretreat uses the powerful cleaning of natural citrus extract and is intended to be used directly on the floor at 100% concentrate.

744 Tough Stuff** Ideal for applications with Hard Water problems. It is safe to use in pressure washers and automatic scrubbers. The formulation enhances soil suspension, digests oil and grease, while supporting extra water conditioner.

PowerCat
P.O. Box 503
Racine, WI 53404-0503
Phone: 414-745-9337
Fax: 262-632-1630
www.powercatsolutions.com

Distributed by:

PowerCat, LLC, 2008.

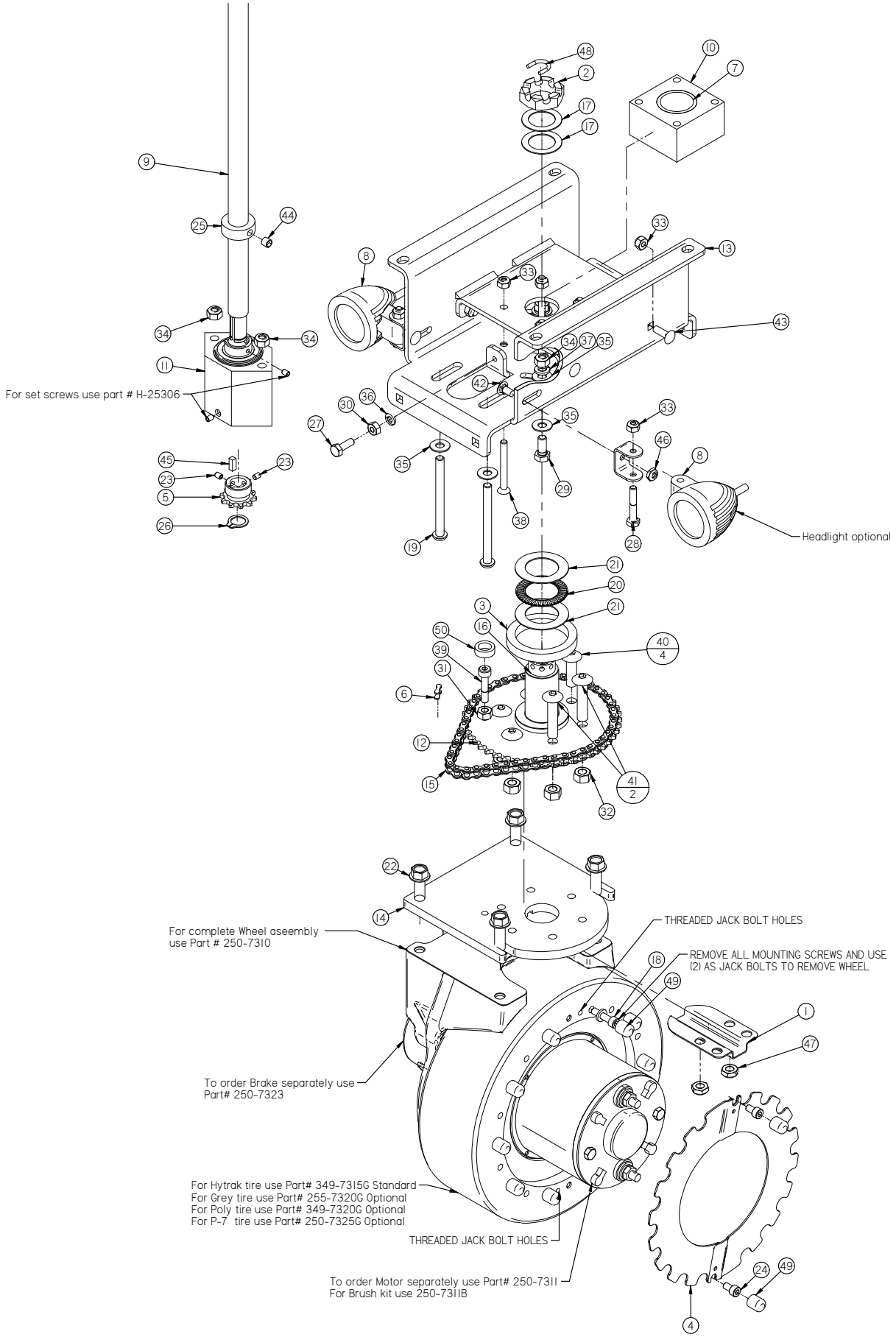
For set screws use part # H-25306
Headlight optional
For complete Wheel aseembly use Part # 250-7310
THREADED JACK BOLT HOLES
REMOVE ALL MOUNTING SCREWS AND USE (2) AS JACK BOLTS TO REMOVE WHEEL
To order Brake separately use Part# 250-7323
For Hytrak tire use Part# 349-7315G Standard
For Grey tire use Part# 255-7320G Optional
For Poly tire use Part# 349-7320G Optional
For P-7 tire use Part# 250-7325G Optional
THREADED JACK BOLT HOLES
To order Motor separately use Part# 250-7311
For Brush kit use 250-7311B

Item	Part No.	Part Description	Qty.
1	250-7328	WIRE GUIDE	1
2	37-7321	SLOTTED NUT, 2.0 - 12	1
3	370-8374	BEARING SEAL	1
4	370-9557	DRIVE GUARD	2
5	5-826	10 TOOTH SPROCKET	1
6	5-831	MASTER LINK	1
7	500-1245	1-1/2" X 1-1/4" X1-1/2" FLG BEARING	1
8	500-2910	HEAD LIGHT	2
9	500-7120	STEERING SHAFT, LOWER	1
10	500-7230	BEARING BLOCK	1
11	500-7231A	BEARING W/HOUSING	1
12	500-7314	48 TOOTH STEERING SPROCKET	1
13	500-7316	FRONT DRIVE DROP PLATE	1
14	500-7326	PIVOT PLATE	1
15	500-7327	48 TOOTH STEERING CHAIN	1
16	500-7332	STEERING SPINDLE	1
17	8-713	1 1/2" THRUST WASHER	2
18	H-0135920	SHC M6-1 X 25 ZINK	10
19	H-0171294	BHSCS 5/16-18 X 3.5	2
20	H-05953	1-1/4 INCH BEARING	1
21	H-05954	1 1/4" WASHER	2
22	H-11115680	FB CASHD M10-1.5 X 30mm	4
23	H-25306	SSS CP #10-32 X 1/4"	2
24	H-2550010	SHCS M-6 X 10	2
25	H-33376	SHAFT COLLAR, 3/4" ID X 9/16 LG	1
26	H-68013	SNAPRING 5/8"	1
27	H-70003	HCS 1/4"-20 X 3/4" SS	1
28	H-70009	HCS 1/4"- 20 X 1.5" SS	2
29	H-70053	HCS 5/16"- 18 X 3/4" SS	2
30	H-70710	HN 1/4"- 20 SS	1
31	H-70711	HN 5/16"- 18 SS	1
32	H-70712	HN 3/8"-16 SS	6
33	H-70860	NYLOK 1/4"- 20 SS	10
34	H-70861	NYLOK 5/16" - 18 SS	4
35	H-71015	FW 5/16 ID X 3/4 OD SS	6
36	H-71063	LW 1/4" SS	1
37	H-71065	LW 5/16" SS	2
38	H-72720	FHP 1/4"- 20 X 2-1/4"	4
39	H-73496	SHCS 5/16-18 X 1-1/4 SS	1
40	H-73816	BHSCS 3/8"- 16 X 1-1/4" SS	4
41	H-73818	BHSCS 3/8"- 16 X 1-3/4" S/S	2
42	H-74417	CB 1/4"- 20 X .5" SS	2
43	H-74419	CB 1/4"- 20 X .75" SS	4
44	H-81983	5/16" X 1/4" KURL SET SCREW	1
45	H-K1432	3/16" X 1/2" KEY	1
46	H-NJ04C	JNYL 1/4" - 20 SS	2
47	H-NJ06C	JNYL 3/8- 16 SS	2
48	M-9381T24	S-HOOK	1
49	M-97533K16	VINYL CAP, 1/2"	12
50	T-050R0025	CLEAR TUBING	1

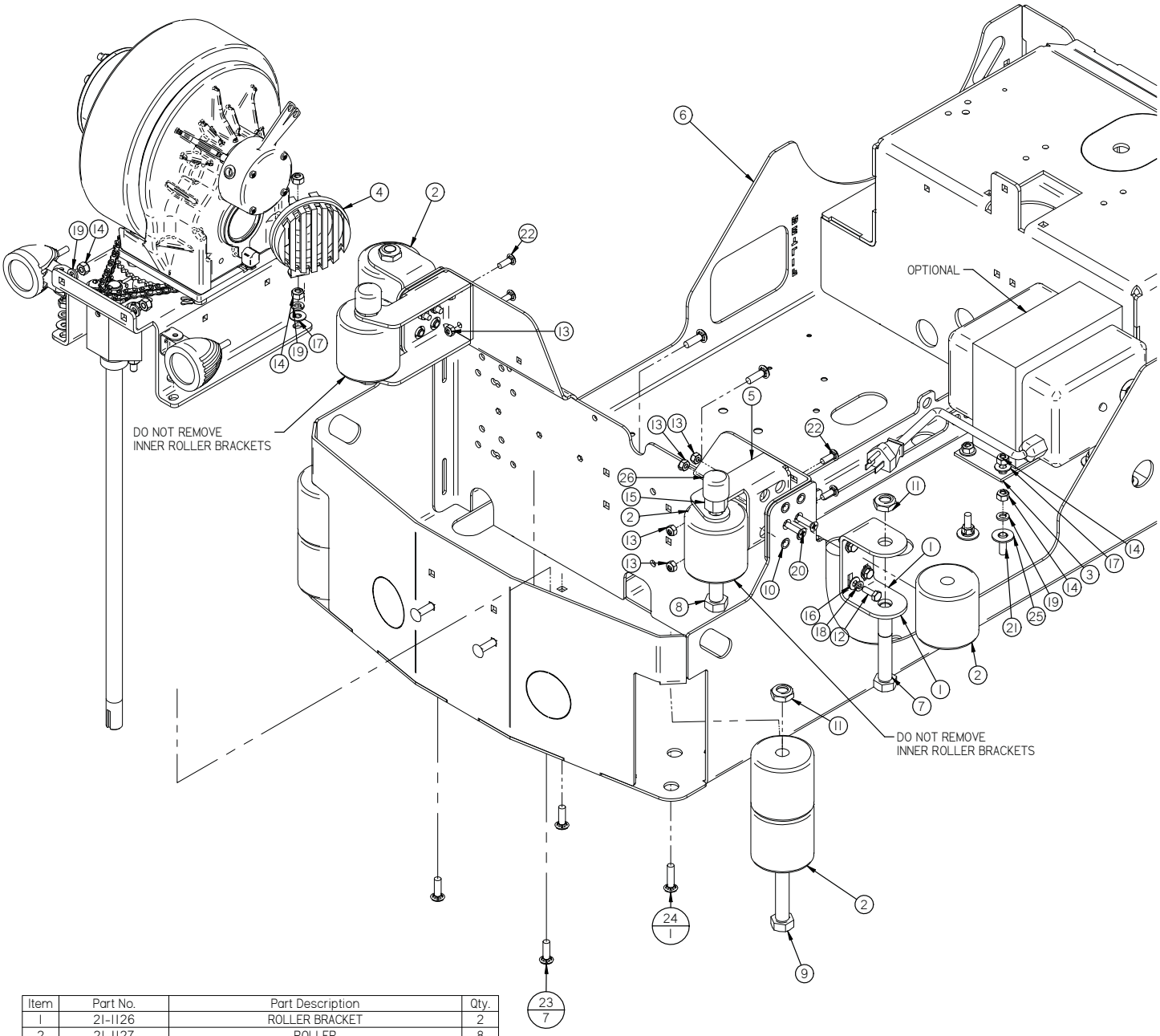

Item	Part No.	Part Description	Qty.
1	21-1126	ROLLER BRACKET	2
2	21-1127	ROLLER	8
3	250-2441	36 VOLT 25 AMP BATTERY CHARGER	1
4	370-2940	HORN	1
5	500-1028	LOWER ROLLER BRACKET	2
6	500-1101	MAIN FRAME	1
7	H-11319	HB 5/8"- 11 X 4"	2
8	H-11321	HB 5/8"- 11 X 4 1/2"	2
9	H-13327	HB 5/8"- 11 X 7"	1
10	H-250HCN	HCN 1/4"-20	8
11	H-37038	JNYL 5/8"- 11	3
12	H-70003	HCS 1/4"-20 X 3/4" SS	3
13	H-70860	NYLOK 1/4"- 20 SS	8
14	H-70861	NYLOK 5/16" - 18 SS	12
15	H-70866	NYL 5/8"- 11	2
16	H-71013	FW 1/4 ID X 5/8 OD SS	3
17	H-71015	FW 5/16 ID X 3/4 OD SS	5
18	H-71063	LW 1/4" SS	3
19	H-71065	LW 5/16" SS	9
20	H-72710	FHP 1/4"- 20 X 1" SS	4
21	H-73909	FHSCS 5/16"- 18 X 1-1/4" SS	4
22	H-74419	CB 1/4"- 20 X .75" SS	4
23	H-74430	CB 5/16"- 18 X 1" SS	7
24	H-74431	CB 5/16"- 18 X 1-1/4" SS	1
25	H-99001	FW 3/8" SS	4
26	M-9267K47	15/16" HEX CAP	2

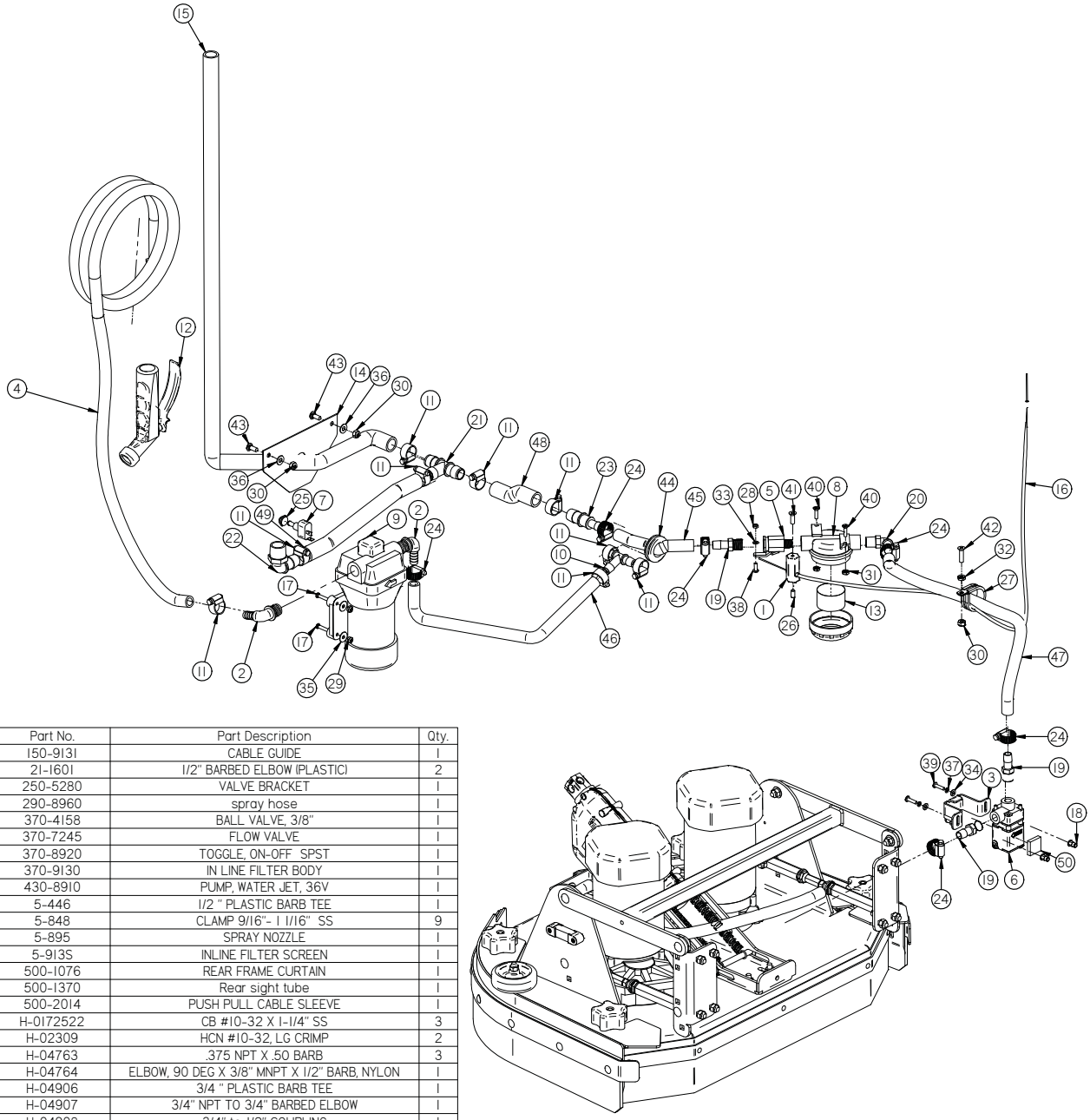

Item	Part No.	Part Description	Qty.
1	150-9131	CABLE GUIDE	1
2	21-1601	1/2" BARBED ELBOW (PLASTIC)	2
3	250-5280	VALVE BRACKET	1
4	290-8960	spray hose	1
5	370-4158	BALL VALVE, 3/8"	1
6	370-7245	FLOW VALVE	1
7	370-8920	TOGGLE, ON-OFF SPST	1
8	370-9130	IN LINE FILTER BODY	1
9	430-8910	PUMP, WATER JET, 36V	1
10	5-446	1/2 " PLASTIC BARB TEE	1
11	5-848	CLAMP 9/16"- 1 1/16" SS	9
12	5-895	SPRAY NOZZLE	1
13	5-913S	INLINE FILTER SCREEN	1
14	500-1076	REAR FRAME CURTAIN	1
15	500-1370	Rear sight tube	1
16	500-2014	PUSH PULL CABLE SLEEVE	1
17	H-0172522	CB #10-32 X 1-1/4" SS	3
18	H-02309	HCN #10-32, LG CRIMP	2
19	H-04763	.375 NPT X .50 BARB	3
20	H-04764	ELBOW, 90 DEG X 3/8" MNPT X 1/2" BARB, NYLON	1
21	H-04906	3/4 " PLASTIC BARB TEE	1
22	H-04907	3/4" NPT TO 3/4" BARBED ELBOW	1
23	H-04908	3/4" to 1/2" COUPLING	1
24	H-081	CLAMP 7/16"- 25/32" SS	6
25	H-11199	PROTECTIVE BOOT, TOGGLE SWITCH, (BLUE)	1
26	H-25382	SETSCREW, KCP, 1/4"-20 X 1/2"	1
27	H-3225T	1-1/2" LOOP CLAMP	1
28	H-70855	NYLOK #6-32 SS	1
29	H-70858	NYLOK #10-32 SS	1
30	H-70860	NYLOK 1/4"- 20 SS	3
31	H-70923	KN #10-32 SS	1
32	H-70925	KN 1/4-20 S/S	1
33	H-71007	FW #8 SS	1
34	H-71009	FW #10 SS	1
35	H-71010	FW #10 ID X 11/16 OD SS	1
36	H-71013	FW 1/4 ID X 5/8 OD SS	2
37	H-71059	LW #10, SS	1
38	H-72516	PPH #6-32 X 1/2" SS	1
39	H-72534	PPH #10-32 X 3/4" S/S	1
40	H-72684	FHP 10-32 X 3/4" SS	2
41	H-73882	FHSCS 1/4- 20 X 3/4" S/S	1
42	H-73883	FHSCS 1/4- 20 X 1.0" S/S	1
43	H-74418	CB 1/4"- 20 X 5/8" S/S	2
44	H-9307K74	GROMMET, 1" ID X 1-3/4" OD BUNA-N	1
45	T-050R0800	1/2"ID X 8"LG SOLUTION HOSE	1
46	T-050R0900	1/2"ID X 9"LG SOLUTION HOSE	1
47	T-050R2300	1/2"ID X 23"LG SOLUTION HOSE	1
48	T-075R0500	3/4"ID X 5"LG SOLUTION HOSE	1
49	T-075R1400	3/4"ID X 14"LG SOLUTION HOSE	1
50	T-438350025	VALVE PAD	1

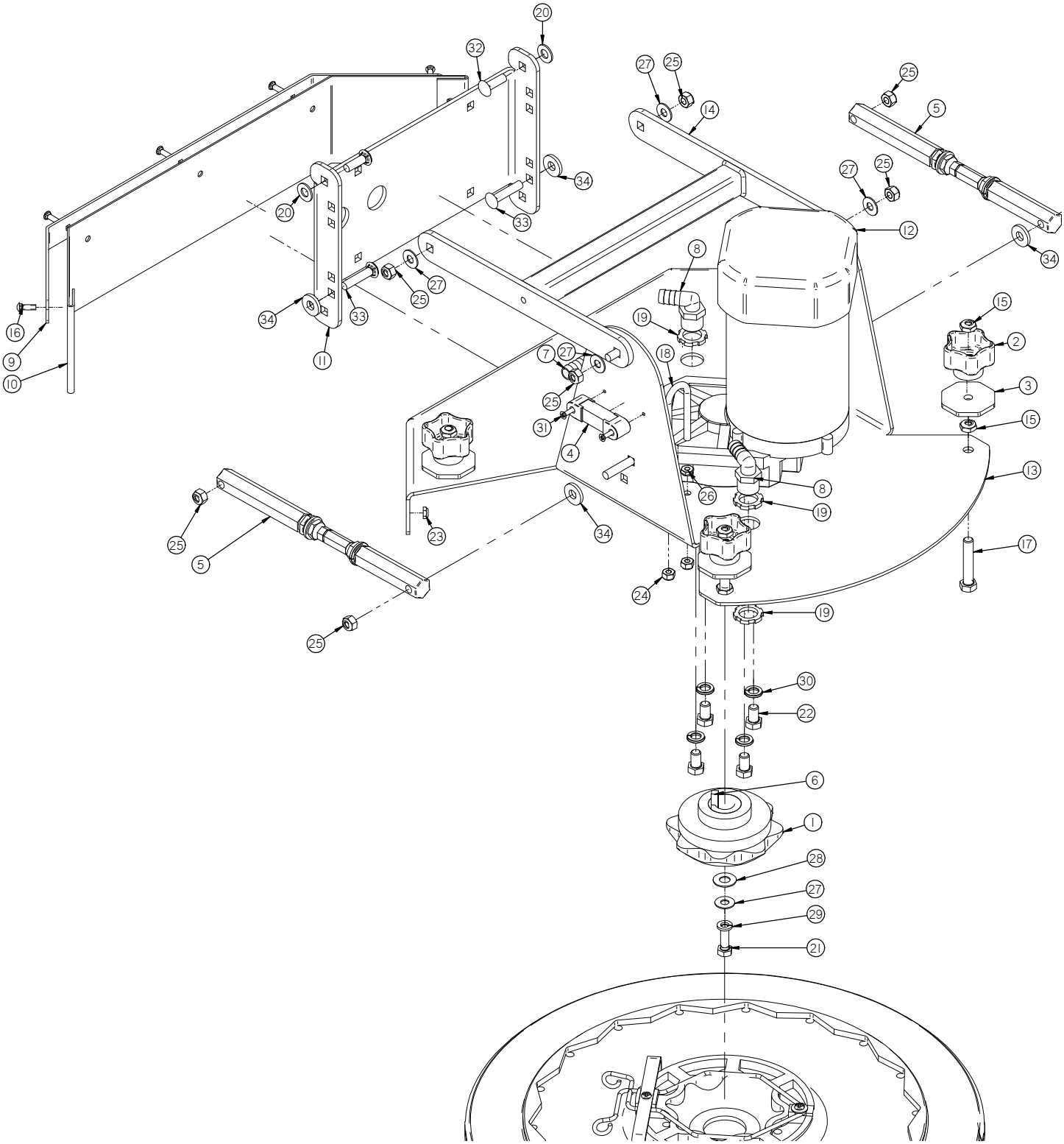

Item	Part No.	Part Description	Qty.	Item	Part No.	Part Description	Qty.
1	21-5000	BRUSH DRIVER	1	18	H-0175687	1/4-20 X 3/4" U-BOLT	1
2	21-7205	STAR KNOB	4	19	H-07005	1/2" NPT LOCKNUT	4
3	250-1084	SHROUD ADJUSTMENT KNOB	4	20	H-4440024	FW 3/8" X 3/4 NYLON	4
4	300-4030	LEVEL	2	21	H-70055	HCS 5/16"- 18 X 1" SS	1
5	300-8421	ADJUSTABLE LATERAL ARM	2	22	H-70140	HCS 3/8"-24 X 5/8" SS	4
6	5-431	1/4" X 1" KEY	1	23	H-70858	NYLOK #10-32 SS	5
7	5-446	1/2 " PLASTIC BARB TEE	1	24	H-70860	NYLOK 1/4"- 20 SS	2
8	5-447	1/2 NPT X 1/2" BARB ELBOW	2	25	H-70861	NYLOK 5/16" - 18 SS	8
9	500-1082	20" FRONT CURTAIN BAND	1	26	H-70925	KN 1/4-20 S/S	2
10	500-1165	23 INCH FRONT DECK CURTAIN	1	27	H-71015	FW 5/16 ID X 3/4 OD SS	5

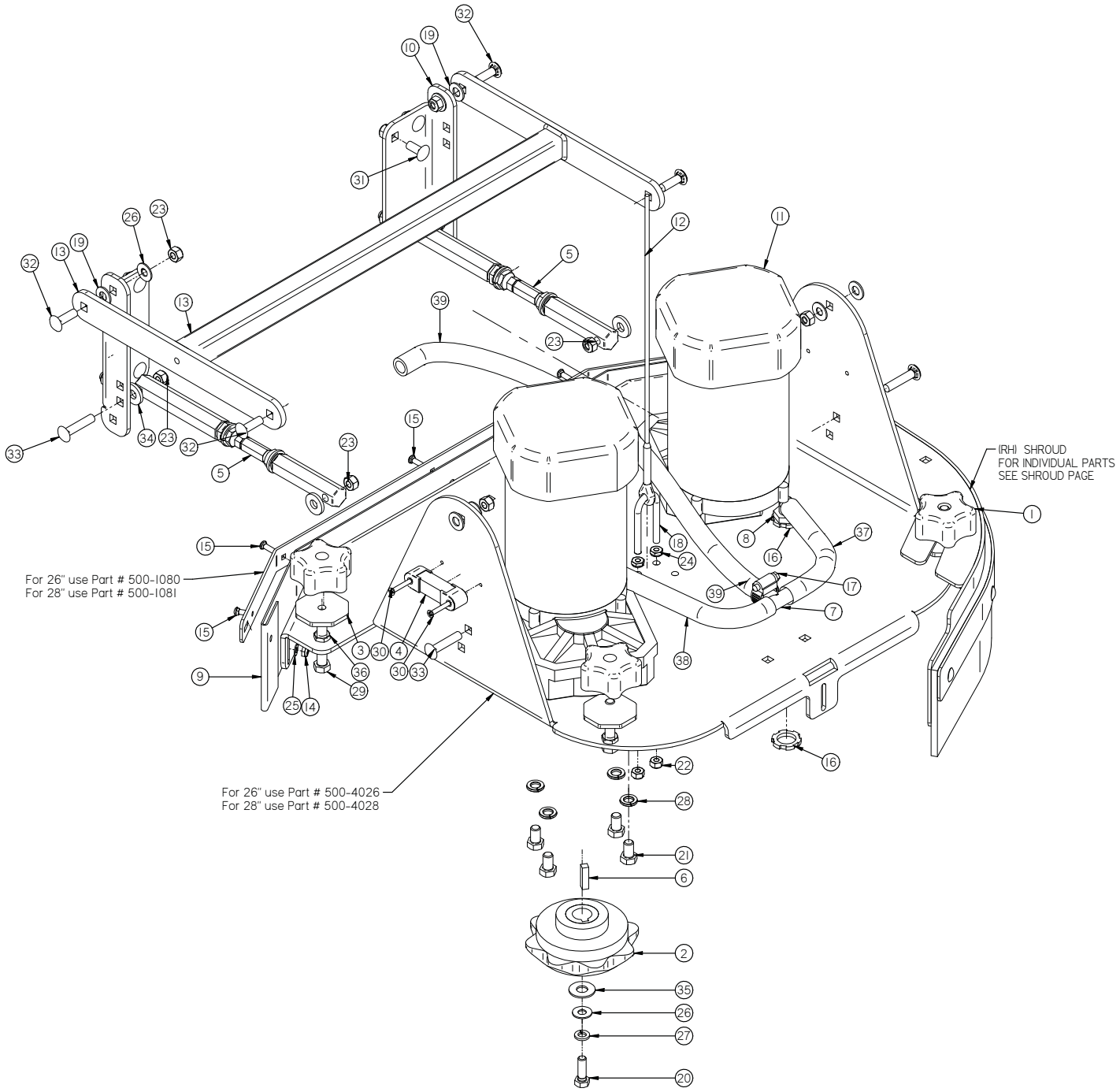

Item	Part No.	Part Description	Qty.	Item	Part No.	Part Description	Qty.
1	150-5786	STAR KNOB, 3/8-16 THREAD	4	20	H-70055	HCS 5/16"- 18 X 1" SS	2
2	21-5000	BRUSH DRIVER	2	21	H-70140	HCS 3/8"-24 X 5/8" SS	8
3	250-1184	SHROUD ADJ. KNOB (3/8-16 THREAD)	4	22	H-70860	NYLOK 1/4"- 20 SS	2
4	300-4030	LEVEL	2	23	H-70861	NYLOK 5/16" - 18 SS	16
5	300-8421	ADJUSTABLE LATERAL ARM	2	24	H-70925	KN 1/4-20 S/S	2
6	5-431	1/4" X 1" KEY	2	25	H-71009	FW #10 SS	5
7	5-446	1/2 " PLASTIC BARB TEE	1	26	H-71015	FW 5/16 ID X 3/4 OD SS	6
8	5-447	1/2 NPT X 1/2" BARB ELBOW	2	27	H-71065	LW 5/16" SS	2
9	500-1164	26/28 FRONT DECK CURTAIN	1	28	H-71067	LW 3/8" SS	8
10	500-1265	SCRUB ARM BRACKET	2	29	H-71190	HCS 3/8"- 16 X 2-1/2" SS (FULLY THREADED)	4
11	500-2220	MOTOR, 36V, 3/4 HP, 300 RPM	2	30	H-72645	FHP #8-32 X 1.0"	4
12	500-7890	DECK LIFT CABLE	1	31	H-74429	CB 5/16"- 18 X 3/4" SS	8
13	500-9586	26/28 INCH LATERAL ARM	1	32	H-74430	CB 5/16"- 18 X 1" SS	4
14	H-0129155	JNYL #10-32, 18-8 S/S	5	33	H-74432	CB 5/16"- 18 X 1-1/2" SS	4
15	H-0172519	CB #10-32 X 5/8" SS	5	34	H-98025	FW 3/8" GRADE 8	4
16	H-07005	1/2" NPT LOCKNUT	4	35	H-99001	FW 3/8" SS	2
17	H-081	CLAMP 7/16"- 25/32" SS	1	36	H-NJ06C	JNYL 3/8- 16 SS	4
18	H-42003	U-BOLT, 1/4-20 X 3/4" ID X 2-1/4" LG, S/S	1	37	T-050R0900	1/2"ID X 9"LG DECK HOSE	1
19	H-4440024	FW 3/8" X 3/4 NYLON	4	38	T-050R1700	1/2"ID X 17"LG DECK HOSE	1
				39	T-050R3600	1/2"ID X 36"LG SOLUTION HOSE	1

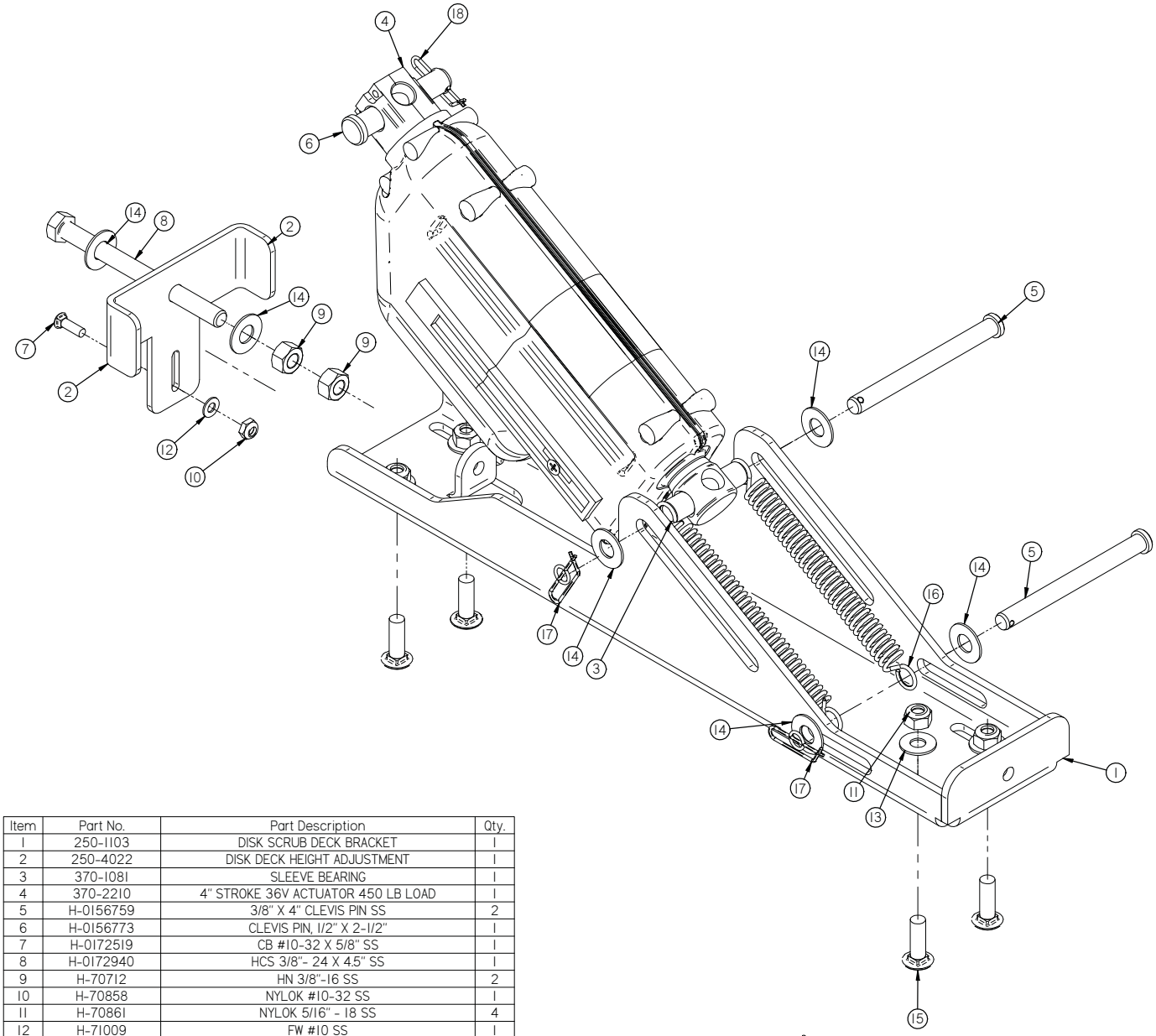

Item	Part No.	Part Description	Qty.
1	250-1103	DISK SCRUB DECK BRACKET	1
2	250-4022	DISK DECK HEIGHT ADJUSTMENT	1
3	370-1081	SLEEVE BEARING	1
4	370-2210	4" STROKE 36V ACTUATOR 450 LB LOAD	1
5	H-0156759	3/8" X 4" CLEVIS PIN SS	2
6	H-0156773	CLEVIS PIN, 1/2" X 2-1/2"	1
7	H-0172519	CB #10-32 X 5/8" SS	1
8	H-0172940	HCS 3/8"- 24 X 4.5" SS	1
9	H-70712	HN 3/8"-16 SS	2
10	H-70858	NYLOK #10-32 SS	1
11	H-70861	NYLOK 5/16" - 18 SS	4
12	H-71009	FW #10 SS	1
13	H-71015	FW 5/16 ID X 3/4 OD SS	4
14	H-71017	FW 3/8 ID X 7/8 OD SS	6
15	H-74430	CB 5/16"- 18 X 1" SS	4
16	H-96544	SPRING, 4-1/8" LG X 9/16" OD (42E)	2
17	H-RUE14	3/8" RUE RING COTTER	2
18	H-RUE22	1/2" RUE RING COTTER	1

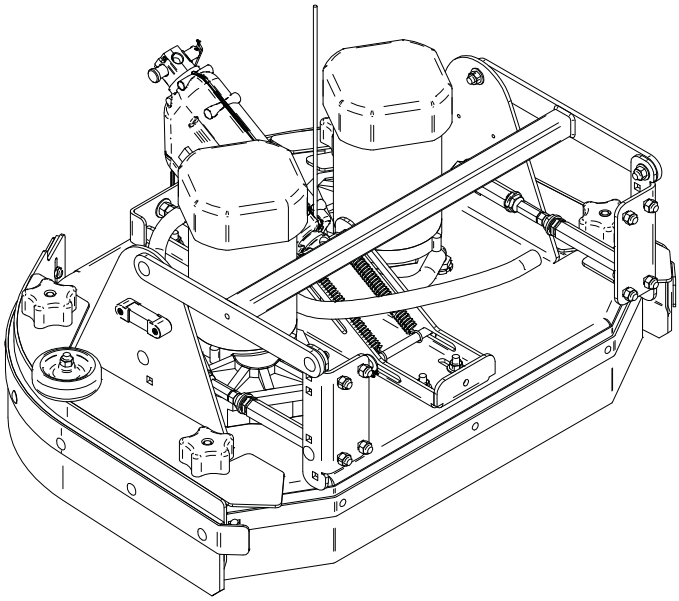

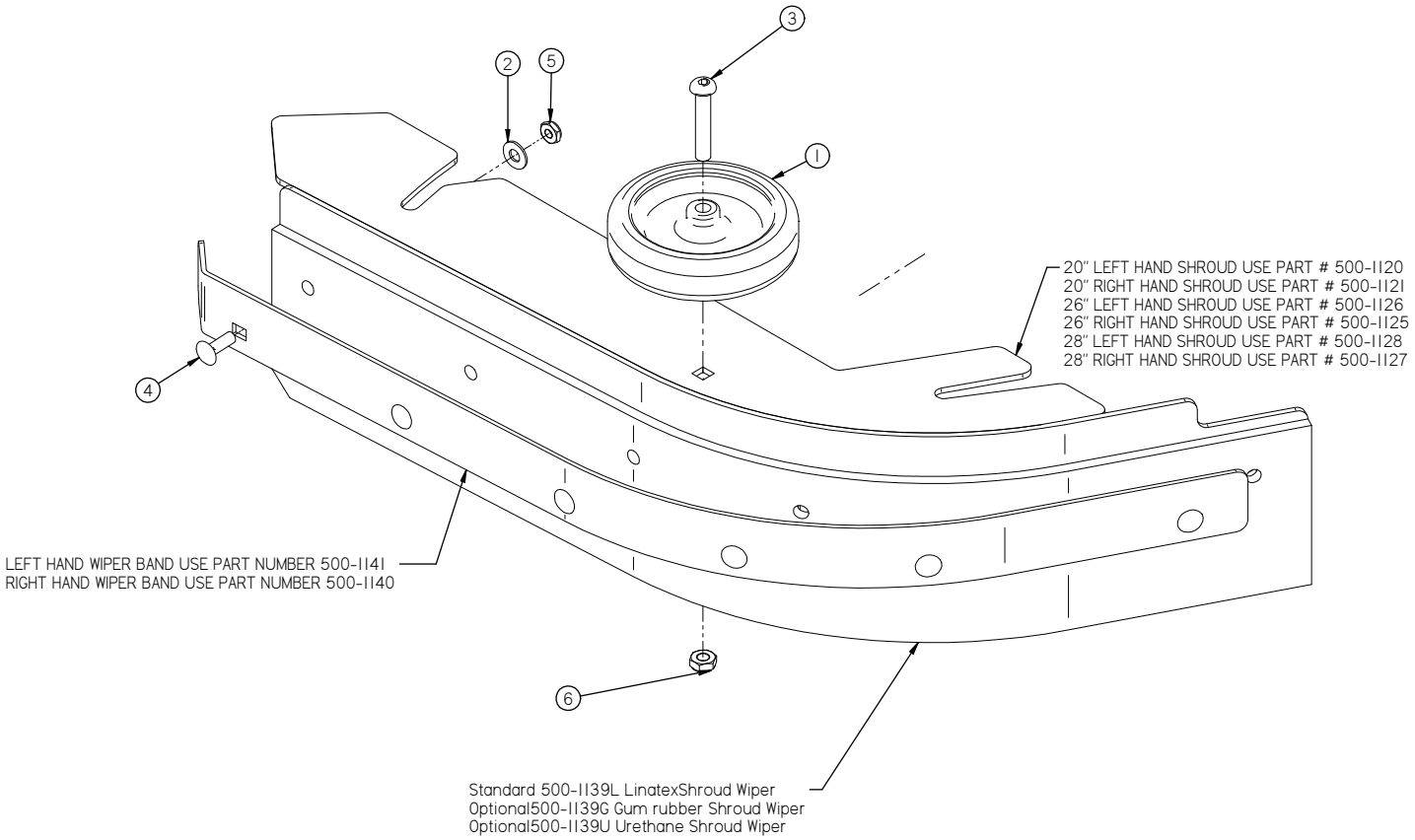

Item	Part No.	Part Description	Qty.
1	150-7600	4" SIDE WHEEL (GREY)	1
2	H-71013	FW 1/4 ID X 5/8 OD SS	6
3	H-73783	BHSCS 5/16-18 X 1.75	1
4	H-74419	CB 1/4"- 20 X .75" SS	6
5	H-NJ04C	JNYL 1/4" - 20 SS	6
6	H-NJ05C	JNYL 5/16"- 18 SS	1

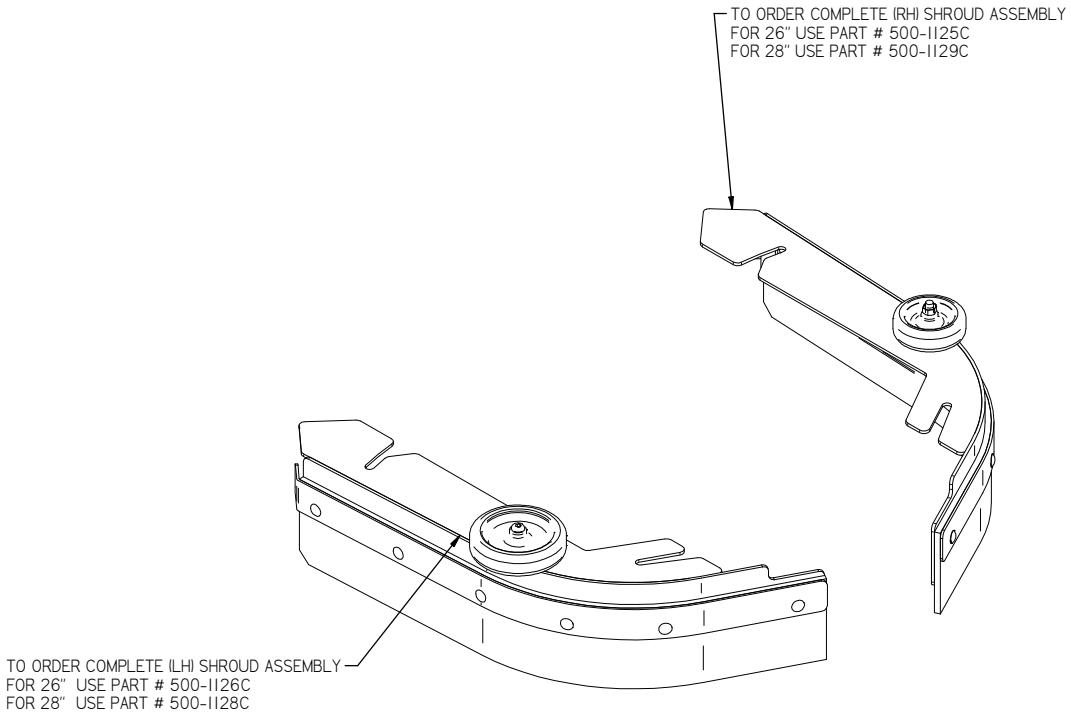

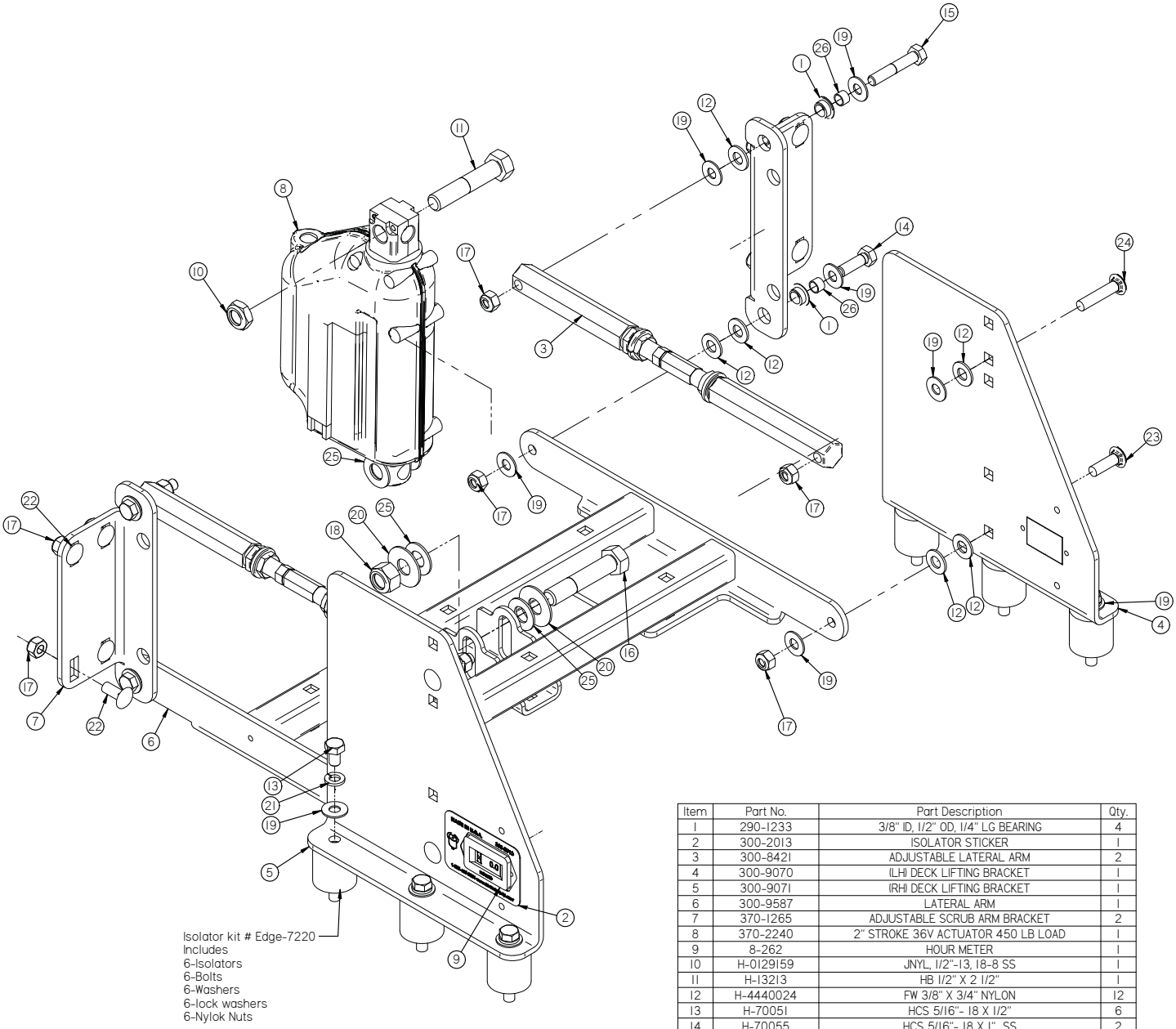

Item	Part No.	Part Description	Qty.
1	290-1233	3/8" ID, 1/2" OD, 1/4" LG BEARING	4
2	300-2013	ISOLATOR STICKER	1
3	300-8421	ADJUSTABLE LATERAL ARM	2
4	300-9070	(LH) DECK LIFTING BRACKET	1
5	300-9071	(RH) DECK LIFTING BRACKET	1
6	300-9587	LATERAL ARM	1
7	370-1265	ADJUSTABLE SCRUB ARM BRACKET	2
8	370-2240	2" STROKE 36V ACTUATOR 450 LB LOAD	1
9	8-262	HOUR METER	1
10	H-0129159	JNYL, 1/2"-13, 18-8 SS	1
11	H-13213	HB 1/2" X 2 1/2"	1
12	H-4440024	FW 3/8" X 3/4" NYLON	12
13	H-70051	HCS 5/16"- 18 X 1/2"	6
14	H-70055	HCS 5/16"- 18 X 1" SS	2
15	H-70060	HCS 5/16"- 18 X 1-3/4" SS	2
16	H-70213	HCS 1/2"-13 X 2-1/2" SS	1
17	H-70861	NYLOK 5/16" - 18 SS	16
18	H-70864	NYLOK 1/2"-13 SS	1
19	H-71015	FW 5/16 ID X 3/4 OD SS	18
20	H-71021	FW 1/2 ID X 1-1/4 OD SS	2
21	H-71065	LW 5/16" SS	6
22	H-74429	CB 5/16"- 18 X 3/4" SS	8
23	H-74430	CB 5/16"- 18 X 1" SS	2
24	H-74432	CB 5/16"- 18 X 1-1/2" SS	2
25	H-76065	FW 1/2" NYLON	4
26	M-6391K403	.312 ID X .375 OD X .25 LG BEARING SLEEVE	4

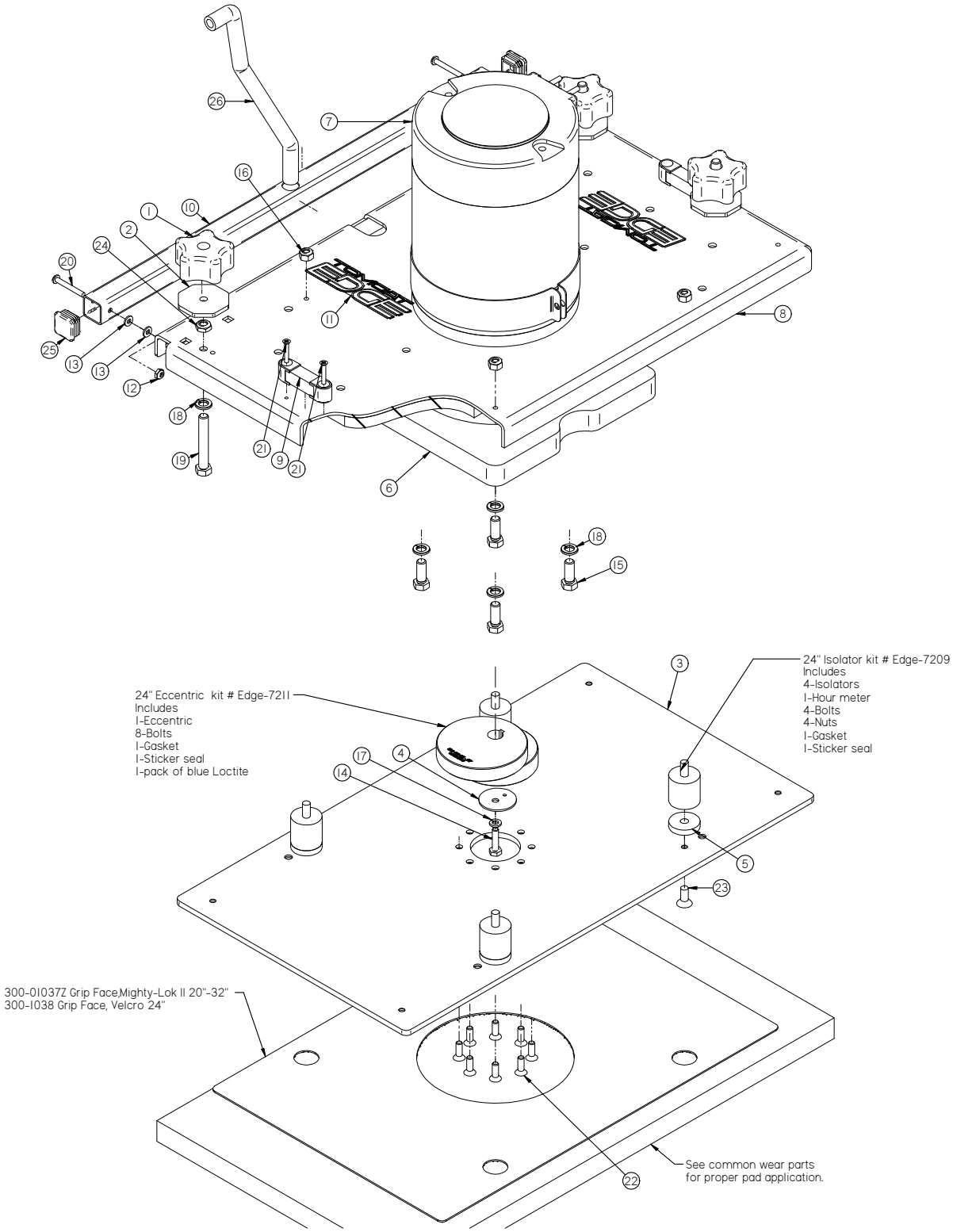

Item	Part No.	Part Description	Qty.	Item	Part No.	Part Description	Qty.
1	150-5786	STAR KNOB, 3/8-16 THREAD	4	14	H-70005	HCS 1/4"- 20 X 1" SS	1
2	250-1184	SHROUD ADJ. KNOB (3/8-16 THREAD)	4	15	H-70105	HCS 3/8"- 16 X 1" SS	4
3	300-01024Z	24 INCH ALUMINUM PAD DRIVER	1	16	H-70861	NYLOK 5/16" - 18 SS	4
4	300-01030Z	CRUSH WASHER	1	17	H-71063	LW 1/4" SS	1
5	300-01033Z	20 & 28" SPACER	4	18	H-71067	LW 3/8" SS	8
6	300-1073	1" BEARING GASKET	1	19	H-71190	HCS 3/8"- 16 X 2-1/2" SS (FULLY THREADED)	4
7	300-2600	36V,1HP,2700 RPM	1	20	H-72554	PPH #10-32 X 1-1/2"	2
8	300-4027	24 INCH SQUARE HEAD DECK	1	21	H-72645	FHP #8-32 X 1.0"	4
9	300-4030	LEVEL	2	22	H-72708	FHP 1/4"- 20 X 3/4"	8
10	300-5024	SQ. SOLUTION FEED TUBE (24")	1	23	H-73907	FHSCS 5/16"- 18 X 3/4" SS	4
11	EDGE-7203	5 INCH EDGE STICKER	2	24	H-NJ06C	JNYL 3/8- 16 SS	4
12	H-0129155	JNYL #10-32, 18-8 S/S	2	25	M-9565K51	1.0 X 1.0 SQ TUBE PLUG	2
13	H-11107629	FW #10 NYLON	4	26	T-050C1300	EDGE FEED TUBE	1

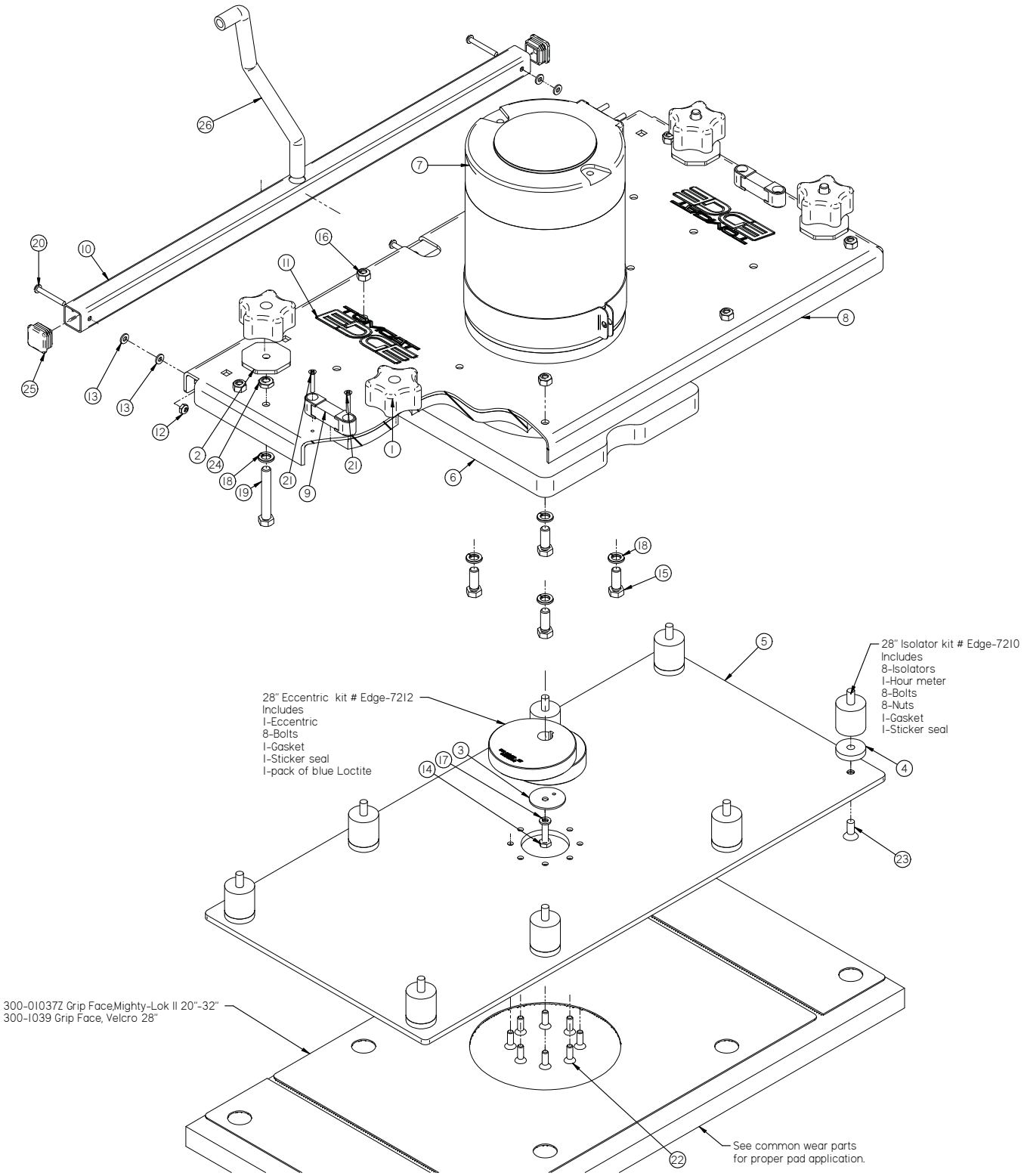

Item	Part No.	Part Description	Qty.	Item	Part No.	Part Description	Qty.
1	150-5786	STAR KNOB, 3/8-16 THREAD	4	14	H-70005	HCS 1/4"- 20 X 1" SS	1
2	250-1184	SHROUD ADJ. KNOB (3/8-16 THREAD)	4	15	H-70105	HCS 3/8"- 16 X 1" SS	4
3	300-01030Z	CRUSH WASHER	1	16	H-70861	NYLOK 5/16" - 18 SS	8
4	300-01033Z	20 & 28" SPACER	8	17	H-71063	LW 1/4" SS	1
5	300-01035Z	28 INCH ALUMINUM PAD DRIVER	1	18	H-71067	LW 3/8" SS	8
6	300-1073	1" BEARING GASKET	1	19	H-71190	HCS 3/8"- 16 X 2-1/2" SS (FULLY THREADED)	4
7	300-2600	36V,1HP,2700 RPM	1	20	H-72554	PPH #10-32 X 1-1/2"	3
8	300-4022	28 INCH SQUARE HEAD DECK	1	21	H-72645	FHP #8-32 X 1.0"	4
9	300-4030	LEVEL	2	22	H-72708	FHP 1/4"- 20 X 3/4"	8
10	300-5028	SQ. SOLUTION FEED TUBE (28")	1	23	H-73907	FHSCS 5/16"- 18 X 3/4" SS	8
11	EDGE-7203	5 INCH EDGE STICKER	2	24	H-NJ06C	JNYL 3/8- 16 SS	4
12	H-0129155	JNYL #10-32, 18-8 S/S	3	25	M-9565K51	1.0 X 1.0 SQ TUBE PLUG	2
13	H-11107629	FW #10 NYLON	4	26	T-050C1300	EDGE FEED TUBE	1

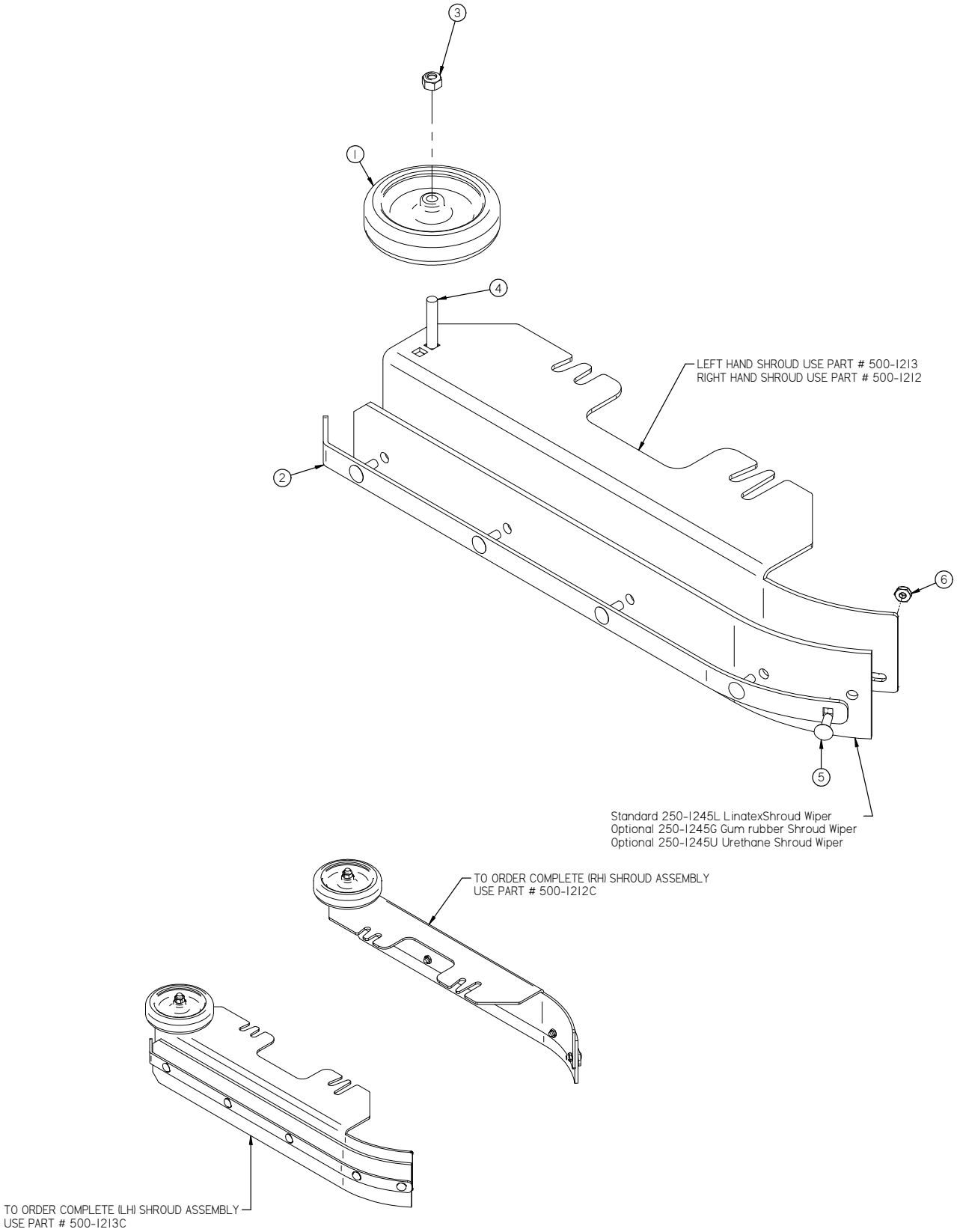

Item	Part No.	Part Description	Qty.
1	150-7600	4" SIDE WHEEL (GREY)	1
2	250-1246	EDGE WIPER BAND	1
3	H-70861	NYLOK 5/16" - 18 SS	1
4	H-74401	CB 5/16"- 18 X 1-3/4" SS	1
5	H-74419	CB 1/4"- 20 X .75" SS	5
6	H-NJ04C	JNYL 1/4" - 20 SS	5

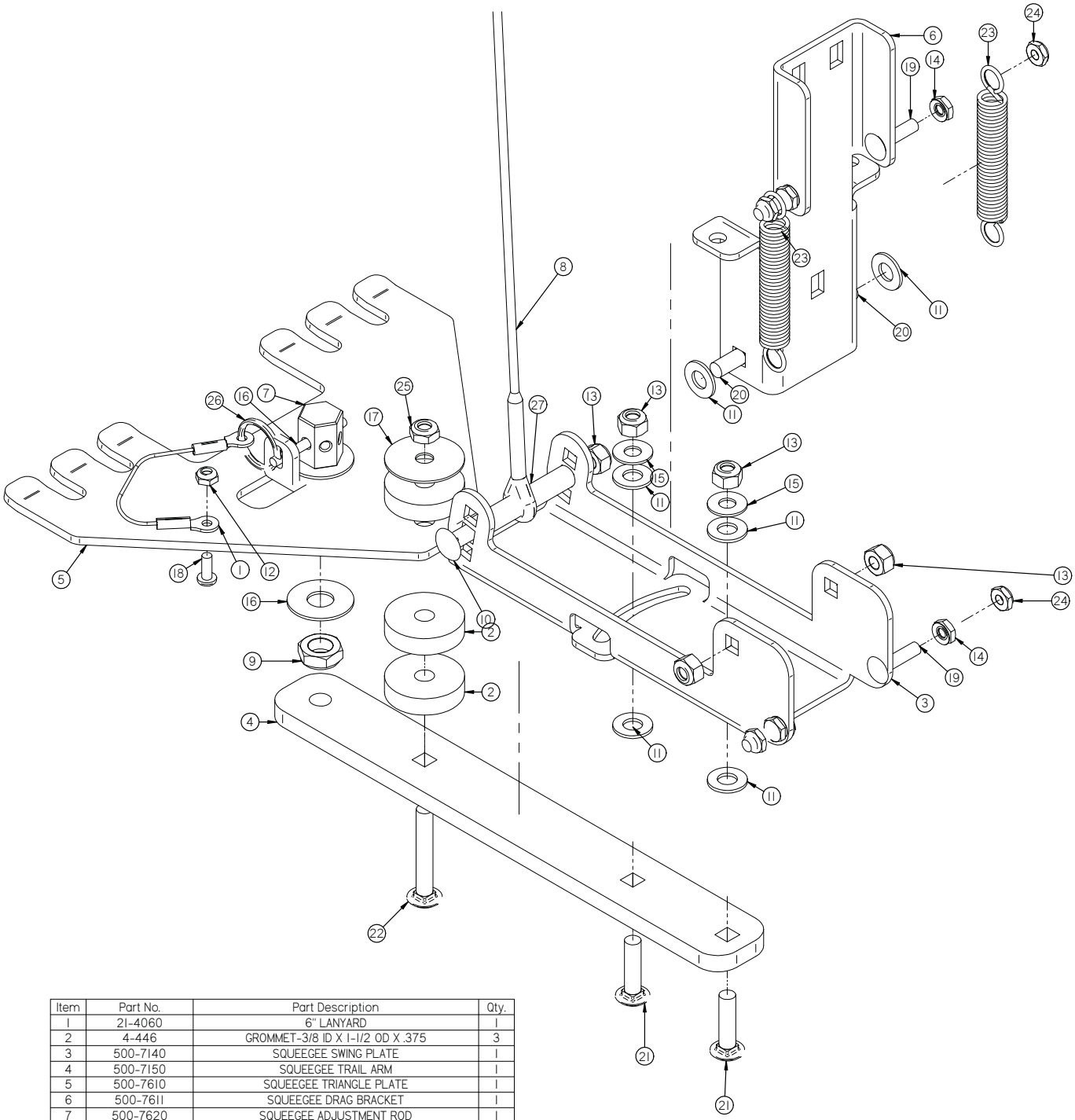

Item	Part No.	Part Description	Qty.
1	21-4060	6" LANYARD	1
2	4-446	GROMMET-3/8 ID X 1-1/2 OD X .375	3
3	500-7140	SQUEEGEE SWING PLATE	1
4	500-7150	SQUEEGEE TRAIL ARM	1
5	500-7610	SQUEEGEE TRIANGLE PLATE	1
6	500-7611	SQUEEGEE DRAG BRACKET	1
7	500-7620	SQUEEGEE ADJUSTMENT ROD	1
8	500-7891	SQUEEGEE LIFT CABLE	1
9	H-0129159	JNYL, 1/2"-13, 18-8 SS	1
10	H-0172530	CB 5/16"- 18 X 3.25" SS	1
11	H-4440024	FW 3/8" X 3/4 NYLON	6
12	H-70858	NYLOK #10-32 SS	1
13	H-70861	NYLOK 5/16" - 18 SS	5
14	H-70925	KN 1/4-20 S/S	4
15	H-71015	FW 5/16 ID X 3/4 OD SS	2
16	H-71021	FW 1/2 ID X 1-1/4 OD SS	2
17	H-71215	FNW 5/16 ID X 1-1/2 OD SS	1
18	H-72515	PPH #10-32 X 1/2" S/S	1
19	H-74420	CB 1/4"- 20 X 1.0" SS	4
20	H-74429	CB 5/16"- 18 X 3/4" SS	2
21	H-74431	CB 5/16"- 18 X 1-1/4" SS	2
22	H-74433	CB 5/16"- 18 X 2" SS	1
23	H-96544	SPRING, 4-1/8" LG X 9/16" OD (42E)	2
24	H-NJ04C	JNYL 1/4" - 20 SS	4
25	H-NJ05C	JNYL 5/16"- 18 SS	1
26	M-98404A015	3/16 X 1-1/2" RING PIN	1
27	T-031B0137	TUBE, 5/16" ID X 7/16" OD X 1-3/8" LG	2

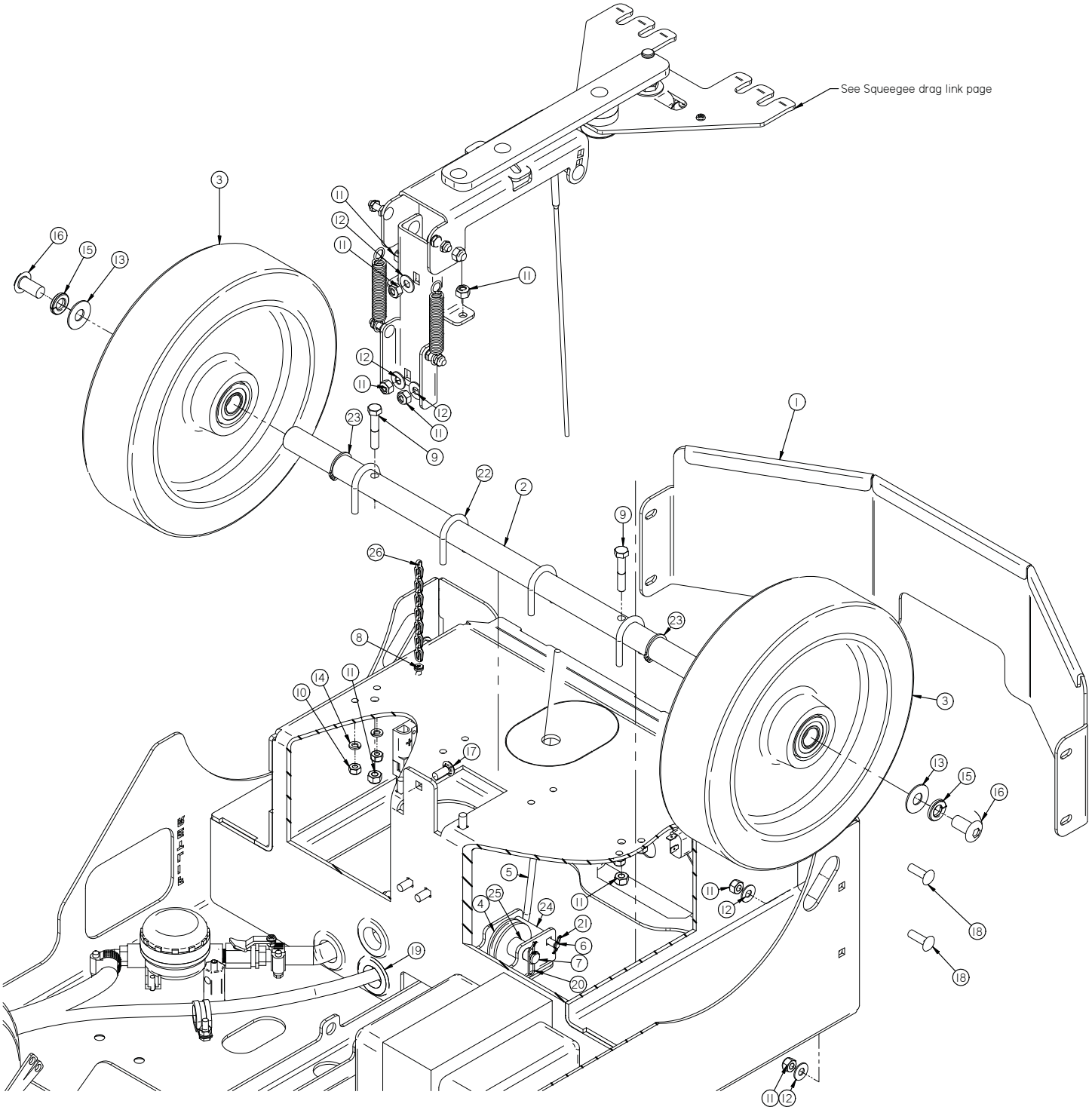

Item	Part No.	Part Description	Qty.	Item	Part No.	Part Description	Qty.
1	500-1105	REAR BUMPER	1	14	H-71063	LW 1/4" SS	1
2	500-1271	AXLE	1	15	H-71071	LW 1/2" SS	2
3	500-6180G	DRIVE TIRE, GRAY POLY	2	16	H-73834	BHSCS 1/2- 13 X 1" SS	2
4	500-7720	PULLEY, NYLON 2"	1	17	H-74429	CB 5/16"- 18 X 3/4" SS	1
5	500-7891	Squeegee lifting cable 62-1/2"	1	18	H-74430	CB 5/16"- 18 X 1" SS	4
6	H-0156734	1/4" X 2 1/2" CLEVIS PIN	1	19	H-9307K74	GROMMET, 1" ID X 1-3/4" OD BUNA-N	3
7	H-0156773	CLEVIS PIN, 1/2" X 2-1/2"	1	20	H-RUE22	1/2" RUE RING COTTER	1
8	H-31810	Hex Cup #10 X 16 x .75	1	21	H-RUE8	RUE RING COTTER	1
9	H-70060	HCS 5/16"- 18 X 1-3/4" SS	2	22	M-3043T13	1/4-20 X 1.0" U-BOLT	4
10	H-70860	NYLOK 1/4"- 20 SS	1	23	M-9858A121	1 INCH EXTERNAL RETAINING RING	2
11	H-70861	NYLOK 5/16" - 18 SS	9	24	T-031B0175	CABLE GUIDE	1
12	H-71015	FW 5/16 ID X 3/4 OD SS	5	25	T-050C0075	CABLE GUIDE	1
13	H-71021	FW 1/2 ID X 1-1/4 OD SS	2	26	T-26B0345G600	6" COLD CROLDING CHAIN	1

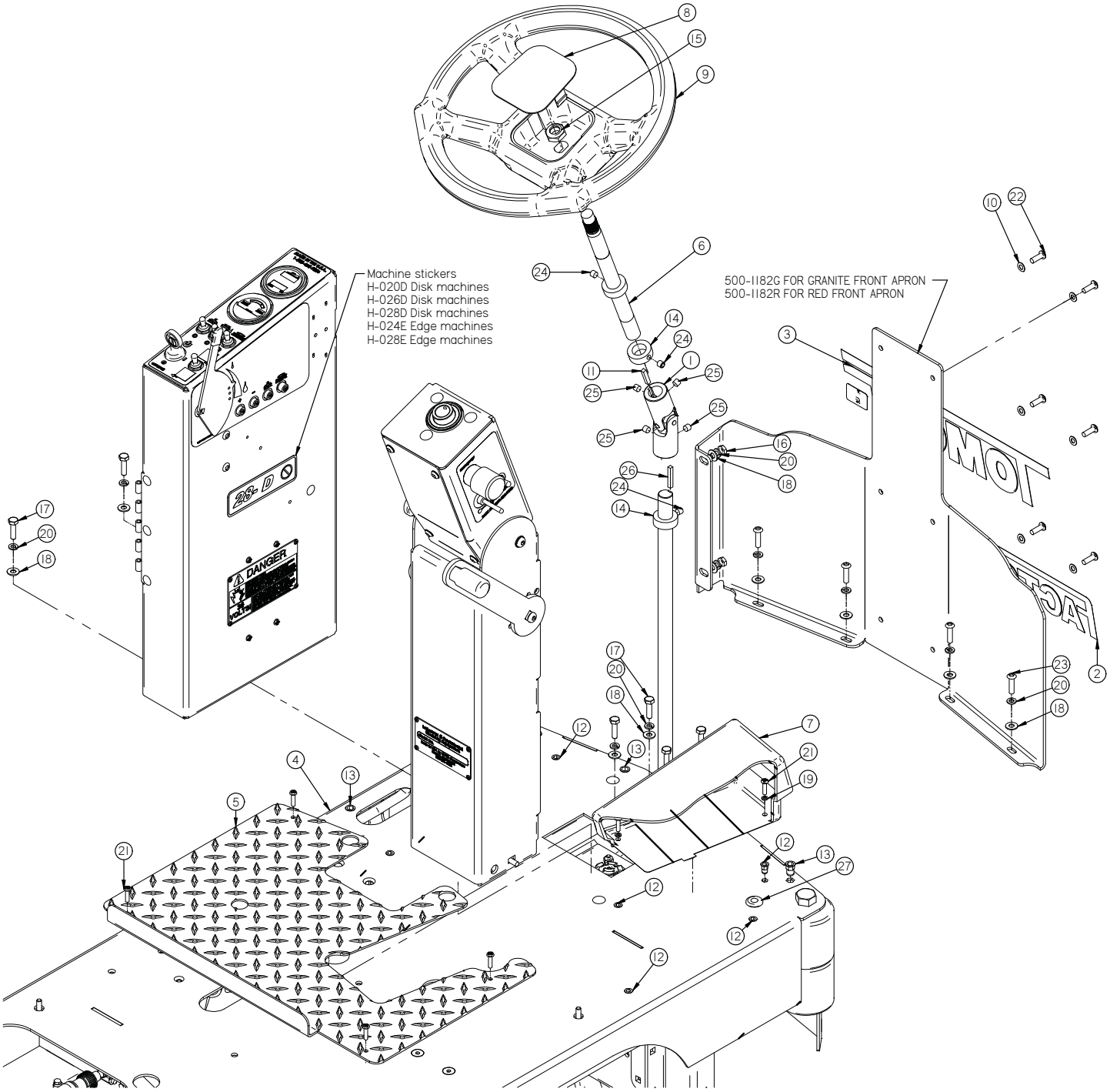

Item	Part No.	Part Description	Qty.	Item	Part No.	Part Description	Qty.
1	290-7110	U-JOINT	1	15	H-37038	JNYL 5/8"- 11	1
2	370-7201	FACTORY CAT STICKER	1	16	H-70003	HCS 1/4"-20 X 3/4" SS	6
3	370-7202	TOMCAT STICKER	1	17	H-70005	HCS 1/4"- 20 X 1" SS	6
4	500-1101	MAIN FRAME	1	18	H-71013	FW 1/4 ID X 5/8 OD SS	14
5	500-1612	NON SKID FLOOR PLATE	1	19	H-71059	LW #10, SS	1
6	500-7090	STEERING SHAFT, UPPER	1	20	H-71063	LW 1/4" SS	14
7	8-290	FOOT PEDAL	1	21	H-72534	PPH #10-32 X 3/4" S/S	5
8	8-701A	STEERING COVER	1	22	H-73754	BHSCS 1/4 - 20 X 3/4" SS	6
9	8-703	STEERING WHEEL	1	23	H-73755	BHSCS 1/4 - 20 X 1" SS	4
10	H-00282	FW 1/4" NYLON	6	24	H-81983	5/16" X 1/4" KURL SET SCREW	3
11	H-01125	3/16" X 1" KEY	1	25	H-82022	5/16-24" X 1/4" KURL SET SCREW	4
12	H-02309	HCN #10-32, LG CRIMP	8	26	H-K14320	3/16" X 1 1/4" KEY	1
13	H-250HCN	HCN 1/4"-20	14	27	M-9307K23	GROMMET .625 DIAMETER HOLE .125 THICK PANEL	1
14	H-33376	SHAFT COLLAR, 3/4" ID X 9/16 LG	3				

BLANK

THIS PAGE WAS INTENTIONALLY LEFT BLANK

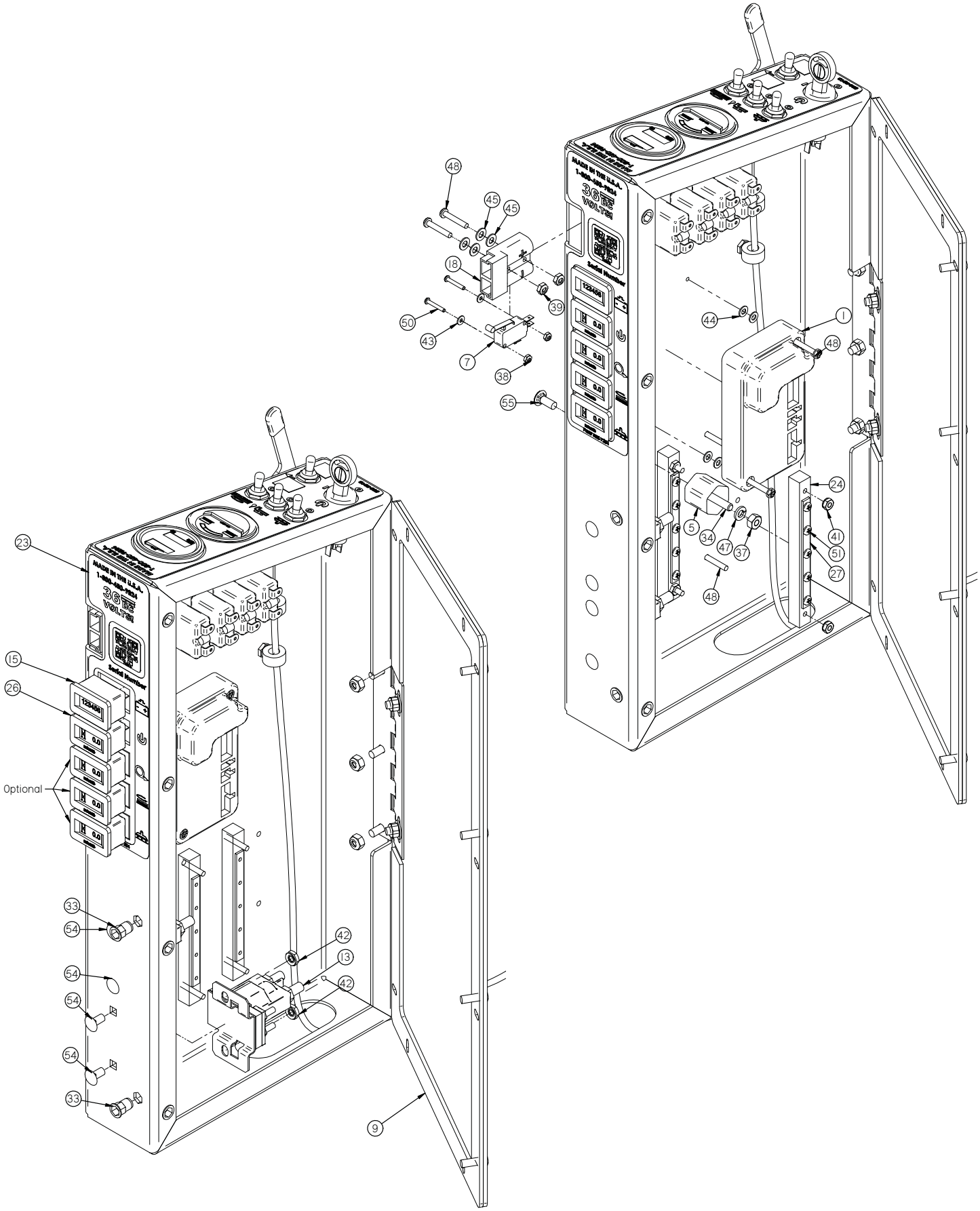
48
45
45
18
39
50
43
7
38
55
44
1
48
24
5
34
47
37
41
51
27
48
23
15
26
Optional
33
54
54
54
54
33
42
13
42
9

Item	Part No.	Part Description	Qty.
1	150-2899	IDRIVE 24V/36V, 70 AMP CONTROLLER	1
2	150-4480	HANDLE GRIP (BLUE)	1
3	190-4852	BRUSH PRESSURE GAUGE, 40 AMP	1
4	190-8370	FUSE RESETTABLE 25 AMP	1
5	200-1011	SWITCHBOARD INSULATOR	1
6	200-4855	36V BATTERY AND HOUR METER	1
7	21-2230	MICRO SWITCH	2
8	250-7290	36V BATTERY WARNING PLATE	1
9	290-2004	ACCESS COVER GASKET	1
10	290-234	KEY SWITCH (WITH KEY)	1
11	290-234A	KEY SET (REPLACE)	1
12	290-9609	FUSE, RESETTABLE, 30 AMP	1
13	370-2331	RELAY, 36V, SMALL W/FLAT MTG PLATE	2
14	370-8210	SWITCH, TOGGLE, ON/ON (DPDT)	2
15	370-8261	CHARGER COUNTER	1
16	370-8920	TOGGLE, ON-OFF SPST	2
17	390-9615	FUSE, RESETTABLE, 15 AMP, 50V DC MAX	2
18	4-260	CONNECTOR, GREY 50	1
19	500-1500	CONTROL PANEL STICKER, FRONT	1
20	500-2003	VALVE LEVER	1
21	500-2013	CONTROL PANEL STICKER, TOP	1
22	500-2014	PUSH PULL CABLE SLEEVE	1
23	500-7204	METER STICKER	1
24	7-287	BUSS BAR UHMW	2
25	8-180	HINGE, 6-7/8" S/S	1
26	8-262	HOUR METER	4
27	E-5HBB	5 HOLE BUSS BAR	2
28	H-00282	FW 1/4" NYLON	1
29	H-11196	PROTECTIVE BOOT, TOGGLE SWITCH, (RED)	1
30	H-11197	PROTECTIVE BOOT, TOGGLE SWITCH, (YELLOW)	1
31	H-11199	PROTECTIVE BOOT, TOGGLE SWITCH, (BLUE)	1
32	H-11200	PROTECTIVE BOOT, TOGGLE SWITCH, (BLACK)	1
33	H-250HCN	HCN 1/4"-20	6
34	H-255HD	STUD 1/4"- 20 X 1"	1
35	H-33372	SHAFT COLLAR, 3/8" ID	2
36	H-41007	AB4-3A BLIND RIVET	4
37	H-70710	HN 1/4"- 20 SS	1
38	H-70854	NYLOK #4-40 SS	4
39	H-70856	NYLOK #8-32 SS	4
40	H-70860	NYLOK 1/4"- 20 SS	6
41	H-70922	KN #8-32	4
42	H-70925	KN 1/4-20 S/S	6
43	H-71004	FW 1/8" X 5/16" SS	4
44	H-71007	FW #8 SS	4
45	H-71009	FW #10 SS	4
46	H-71013	FW 1/4 ID X 5/8 OD SS	7
47	H-71063	LW 1/4" SS	1
48	H-72418	PPH #8-32 X 1" S/S	8
49	H-72419	PPH #8-32 X 1-1/4" S/S	1
50	H-72490	PPH #4-40 X 3/4" S/S	4
51	H-72914	PPH SMS #8 X 1/2"	10
52	H-73753	BHSCS 1/4 - 20 X 5/8" SS	2
53	H-73754	BHSCS 1/4 - 20 X 3/4" SS	4
54	H-74417	CB 1/4"- 20 X .5" SS	4
55	H-74418	CB 1/4"- 20 X 5/8" S/S	7

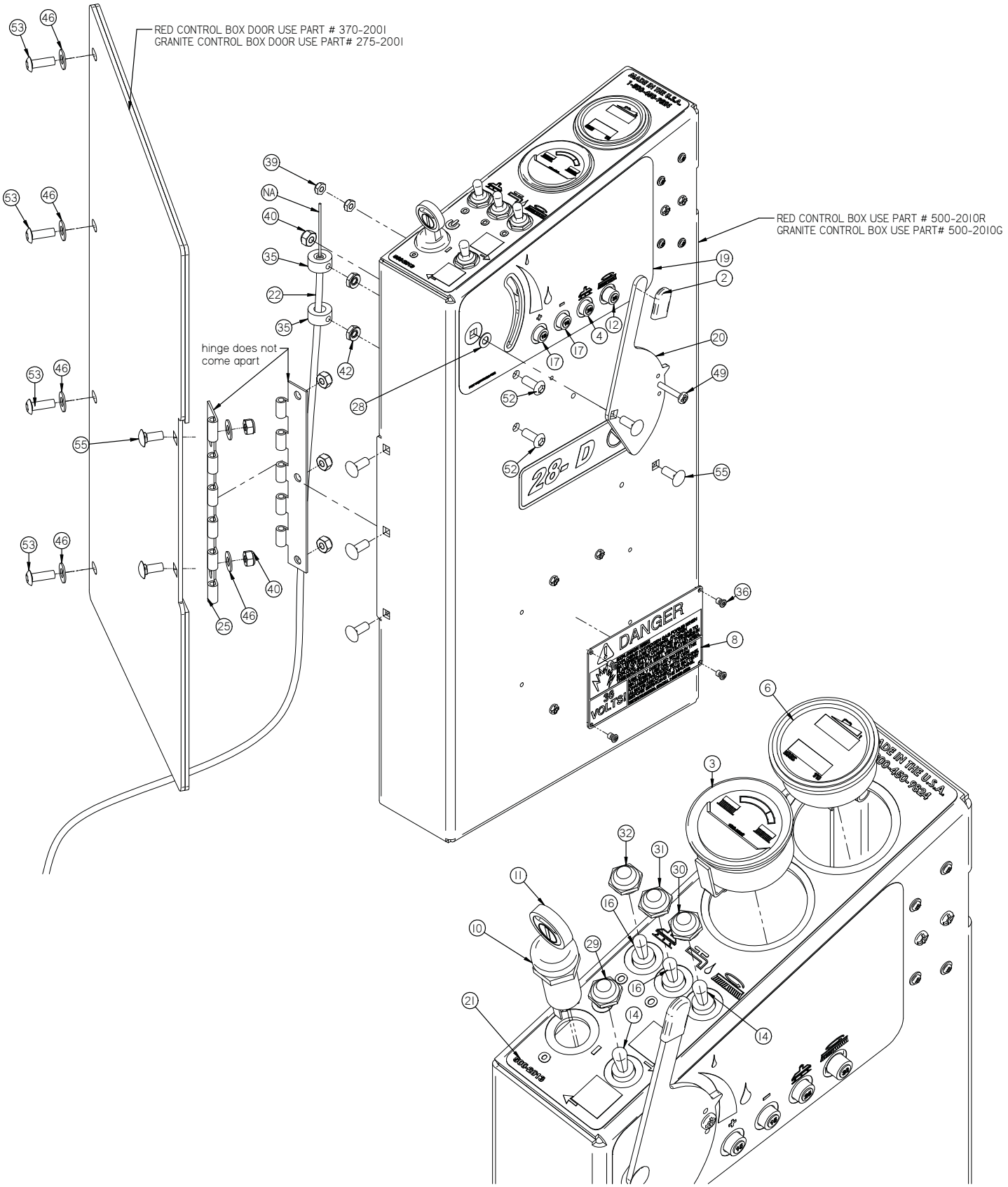
RED CONTROL BOX DOOR USE PART # 370-2001
GRANITE CONTROL BOX DOOR USE PART# 275-2001
RED CONTROL BOX USE PART # 500-2010R
GRANITE CONTROL BOX USE PART# 500-2010G
hinge does not come apart
28-D
DANGER
36 VOLTS!
MADE IN THE U.S.A.
1-800-450-9824
53
46
39
NA
40
35
22
42
28
52
55
25
19
2
4
12
17
20
49
36
8
6
3
32
31
30
11
10
16
29
21
14

Item	Part No.	Part Description	Qty.
1	150-2899	IDRIVE 24V/36V, 70 AMP CONTROLLER	1
2	150-4480	HANDLE GRIP (BLUE)	1
3	190-4852	BRUSH PRESSURE GAUGE, 40 AMP	1
4	190-8370	FUSE RESETTABLE 25 AMP	1
5	200-1011	SWITCHBOARD INSULATOR	1
6	200-4855	36V BATTERY AND HOUR METER	1
7	21-2230	MICRO SWITCH	2
8	250-7290	36V BATTERY WARNING PLATE	1
9	290-2004	ACCESS COVER GASKET	1
10	290-234	KEY SWITCH (WITH KEY)	1
11	290-234A	KEY SET (REPLACE)	1
12	290-9609	FUSE, RESETTABLE, 30 AMP	1
13	370-2331	RELAY, 36V, SMALL W/FLAT MTG PLATE	2
14	370-8210	SWITCH, TOGGLE, ON/ON (DPDT)	2
15	370-8261	CHARGER COUNTER	1
16	370-8920	TOGGLE, ON-OFF SPST	2
17	390-9615	FUSE, RESETTABLE, 15 AMP, 50V DC MAX	2
18	4-260	CONNECTOR, GREY 50	1
19	500-1500	CONTROL PANEL STICKER, FRONT	1
20	500-2003	VALVE LEVER	1
21	500-2013	CONTROL PANEL STICKER, TOP	1
22	500-2014	PUSH PULL CABLE SLEEVE	1
23	500-7204	METER STICKER	1
24	7-287	BUSS BAR UHMW	2
25	8-180	HINGE, 6-7/8" S/S	1
26	8-262	HOUR METER	4
27	E-5HBB	5 HOLE BUSS BAR	2
28	H-00282	FW 1/4" NYLON	1
29	H-11196	PROTECTIVE BOOT, TOGGLE SWITCH, (RED)	1
30	H-11197	PROTECTIVE BOOT, TOGGLE SWITCH, (YELLOW)	1
31	H-11199	PROTECTIVE BOOT, TOGGLE SWITCH, (BLUE)	1
32	H-11200	PROTECTIVE BOOT, TOGGLE SWITCH, (BLACK)	1
33	H-250HCN	HCN 1/4"-20	6
34	H-255HD	STUD 1/4"- 20 X 1"	1
35	H-33372	SHAFT COLLAR, 3/8" ID	2
36	H-41007	AB4-3A BLIND RIVET	4
37	H-70710	HN 1/4"- 20 SS	1
38	H-70854	NYLOK #4-40 SS	4
39	H-70856	NYLOK #8-32 SS	4
40	H-70860	NYLOK 1/4"- 20 SS	6
41	H-70922	KN #8-32	4
42	H-70925	KN 1/4-20 S/S	6
43	H-71004	FW 1/8" X 5/16" SS	4
44	H-71007	FW #8 SS	4
45	H-71009	FW #10 SS	4
46	H-71013	FW 1/4 ID X 5/8 OD SS	7
47	H-71063	LW 1/4" SS	1
48	H-72418	PPH #8-32 X 1" S/S	8
49	H-72419	PPH #8-32 X 1-1/4" S/S	1
50	H-72490	PPH #4-40 X 3/4" S/S	4
51	H-72914	PPH SMS #8 X 1/2"	10
52	H-73753	BHSCS 1/4 - 20 X 5/8" SS	2
53	H-73754	BHSCS 1/4 - 20 X 3/4" SS	4
54	H-74417	CB 1/4"- 20 X .5" SS	4
55	H-74418	CB 1/4"- 20 X 5/8" S/S	7

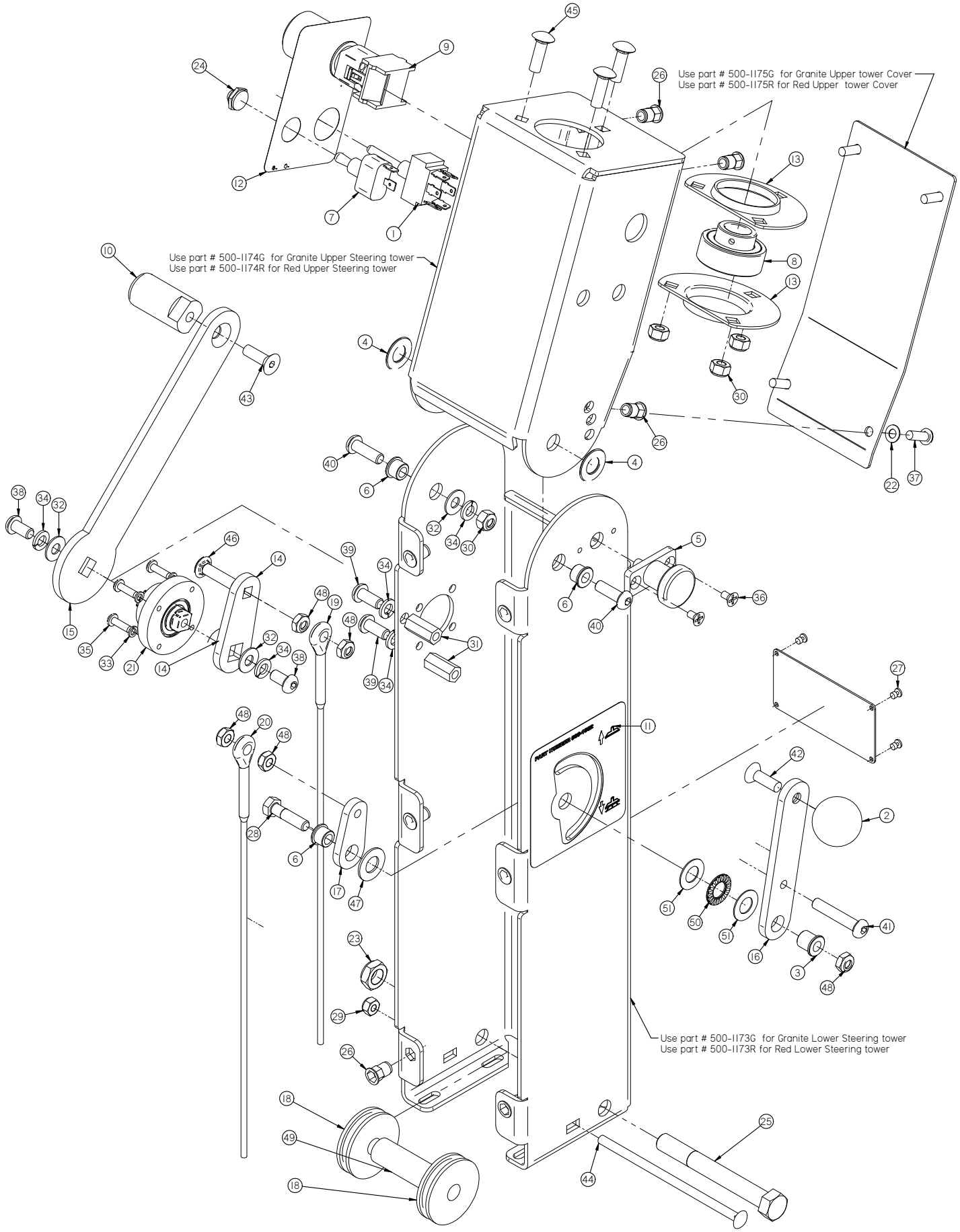
Use part # 500-1175G for Granite Upper tower Cover
Use part # 500-1175R for Red Upper tower Cover
Use part # 500-1174G for Granite Upper Steering tower
Use part # 500-1174R for Red Upper Steering tower
Use part # 500-1173G for Granite Lower Steering tower
Use part # 500-1173R for Red Lower Steering tower

Item	Part No.	Part Description	Qty.
1	150-2830	SWITCH, TOGGLE, MOM/OFF/MOM (DPDT)	1
2	21-7101	LIFT KNOB	1
3	253-1245	BUSHING	1
4	290-1247	BRONZE THRUST BEARING, .50" ID X 1.0" OD X 1/16" TH	2
5	290-7050	INDEX PLUNGER	1
6	370-1245	BUSHING	3
7	370-8920	TOGGLE, ON-OFF SPST	1
8	4-352	BEARING	1
9	5-300	EMERGENCY SHUT OFF	1
10	500-1060	LIFT HANDLE	1
11	500-1502	SQUEEGEE LIFT LEVER STICKER	1
12	500-1503	HORN HEAD LIGHT AND E-STOP STICKER	1
13	500-3640	FLANGE, 1.75" ID	2
14	500-4509	SCRUB DECK LIFT CAM	1
15	500-4510	SCRUB DECK LIFT LEVER	1
16	500-4511	SQUEEGEE LIFT LEVER	1
17	500-4512	SQUEEGEE CAM	1
18	500-7720	PULLEY, NYLON 2"	2
19	500-7890	DECK LIFT CABLE	1
20	500-7891	SQUEEGEE LIFT CABLE	1
21	500-8240A	BEARING HOUSING/BEARING	1
22	H-00282	FW 1/4" NYLON	4
23	H-0129159	JNYL, 1/2"-13, 18-8 SS	1
24	H-11200	PROTECTIVE BOOT, TOGGLE SWITCH, (BLACK)	1
25	H-13224	HB 1/2"-13 X 5-1/2"	1
26	H-250HCN	HCN 1/4"-20	10
27	H-41007	AB4-3A BLIND RIVET	4
28	H-70057	HCS 5/16"- 18 X 1-1/4"	1
29	H-70860	NYLOK 1/4"- 20 SS	1
30	H-70861	NYLOK 5/16" - 18 SS	5
31	H-70943	5/16 - 18 X 1.0 STANDOFF	2
32	H-71015	FW 5/16 ID X 3/4 OD SS	4
33	H-71059	LW #10, SS	4
34	H-71065	LW 5/16" SS	6
35	H-72517	PPH #10-32 X 5/8" SS	4
36	H-72681	FHP #10-32 X 3/8" SS	2
37	H-73754	BHSCS 1/4 - 20 X 3/4" SS	4
38	H-73778	BHSCS 5/16-18 X 5/8"	2
39	H-73779	BHSCS 5/16-18 X 3/4"	2
40	H-73780	BHSCS 5/16-18 X 1	2
41	H-73783	BHSCS 5/16-18 X 1.75	1
42	H-73908	FHSCS 5/16"- 18 X 1" SS	1
43	H-73931	FHSCS 3/8 - 16 X 1" S/S	1
44	H-74399	CB 1/4"- 20 X 5-1/2" SS	1
45	H-74430	CB 5/16"- 18 X 1" SS	3
46	H-74431	CB 5/16"- 18 X 1-1/4" SS	1
47	H-76065	FW 1/2" NYLON	1
48	H-NJ05C	JNYL 5/16"- 18 SS	5
49	M-050R0400	SPACER TUBING	1
50	M-5909K31	NEEDLE ROLLER THRUST BEARING	1
51	M-5909K44	NEEDLE ROLLER THRUST BEARING WASHER	2

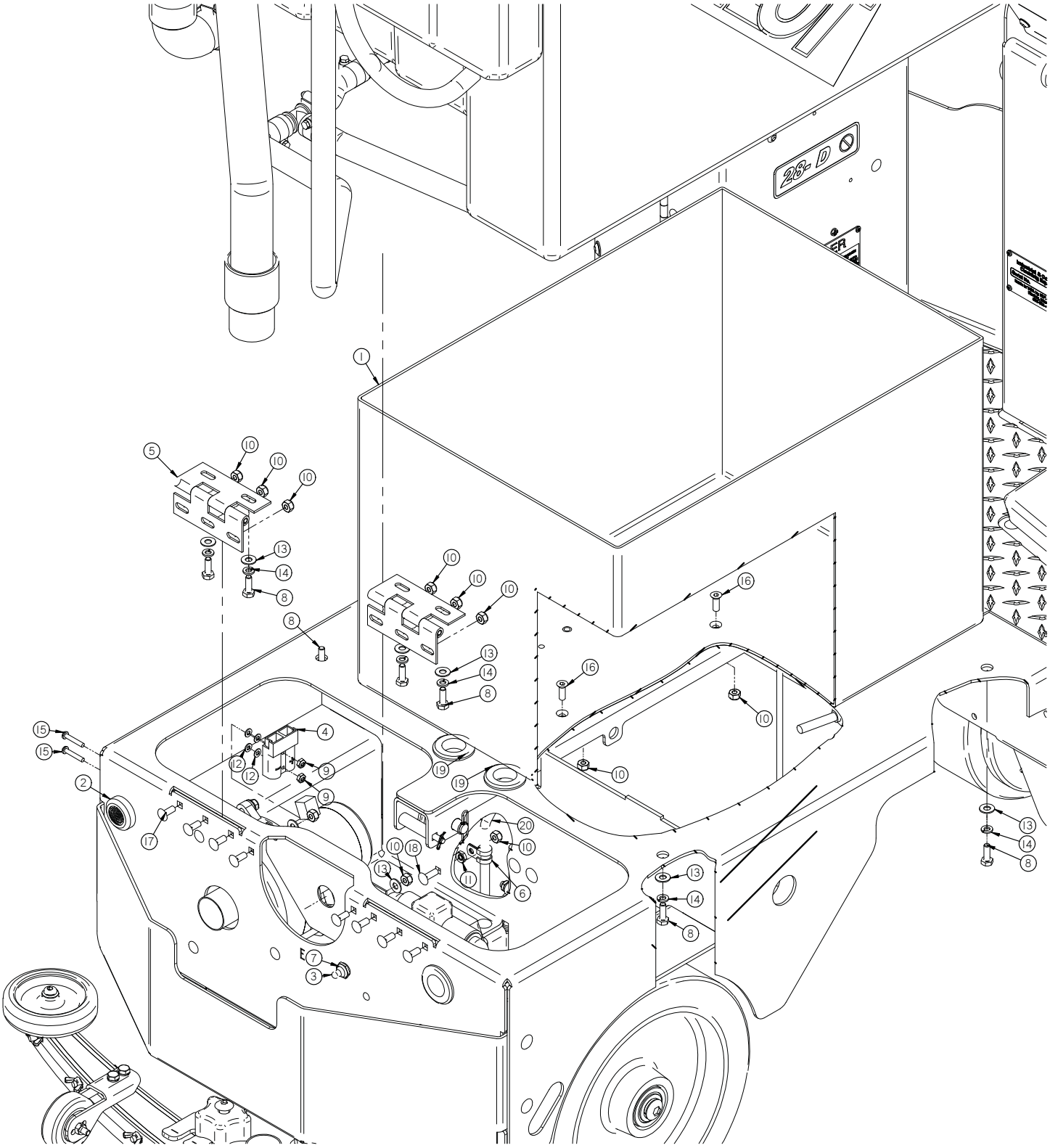

Item	Part No.	Part Description	Qty.	Item	Part No.	Part Description	Qty.
1	270-0001	36V. (3) 12V. BATTERY TRAY	1	11	H-70925	KN 1/4-20 S/S	1
2	370-2930	ALARM (91 dPa)	1	12	H-71007	FW #8 SS	5
3	370-8920	TOGGLE, ON-OFF SPST	1	13	H-71013	FW 1/4 ID X 5/8 OD SS	9
4	4-260	CONNECTOR, GREY 50	1	14	H-71063	LW 1/4" SS	8
5	500-1220	4" SS HINGE	2	15	H-72418	PPH #8-32 X 1" S/S	2
6	H-0127288	3/8" LOOP CLAMP	1	16	H-73882	FHSCS 1/4- 20 X 3/4" S/S	2
7	H-11199	PROTECTIVE BOOT, TOGGLE SWITCH, (BLUE)	1	17	H-74418	CB 1/4"- 20 X 5/8" S/S	6
8	H-70003	HCS 1/4"-20 X 3/4" SS	8	18	H-74419	CB 1/4"- 20 X .75" SS	1
9	H-70856	NYLOK #8-32 SS	2	19	H-9307K74	GROMMET, 1" ID X 1-3/4" OD BUNA-N	2
10	H-70860	NYLOK 1/4"- 20 SS	10	20	T-0318I450	BATTERY DRAIN HOSE	1

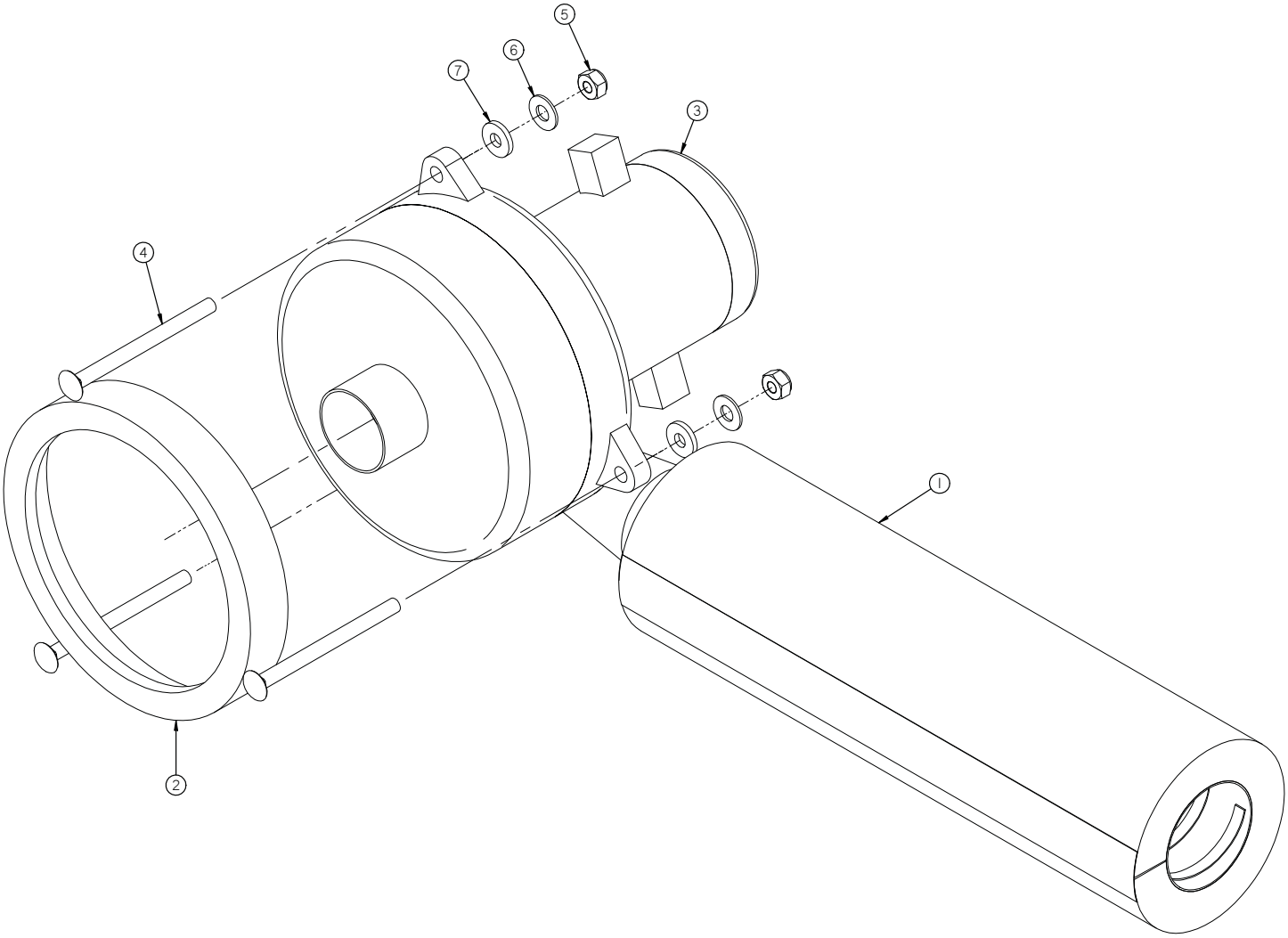

Item	Part No.	Part Description	Qty.
1	430-2502	VACUUM FAN MUFFLER	1
2	5-708A	VAC MOTOR GASKET	1
3	500-5250	36V VAC MOTOR, TANGENTAL W/SNORKEL	1
4	H-0144267	CB 1/4"- 20 X 3-1/4" SS	3
5	H-70860	NYLOK 1/4"- 20 SS	3
6	H-71013	FW 1/4 ID X 5/8 OD SS	3
7	M-90130A029	.25" NEOPRENE WASHER	3

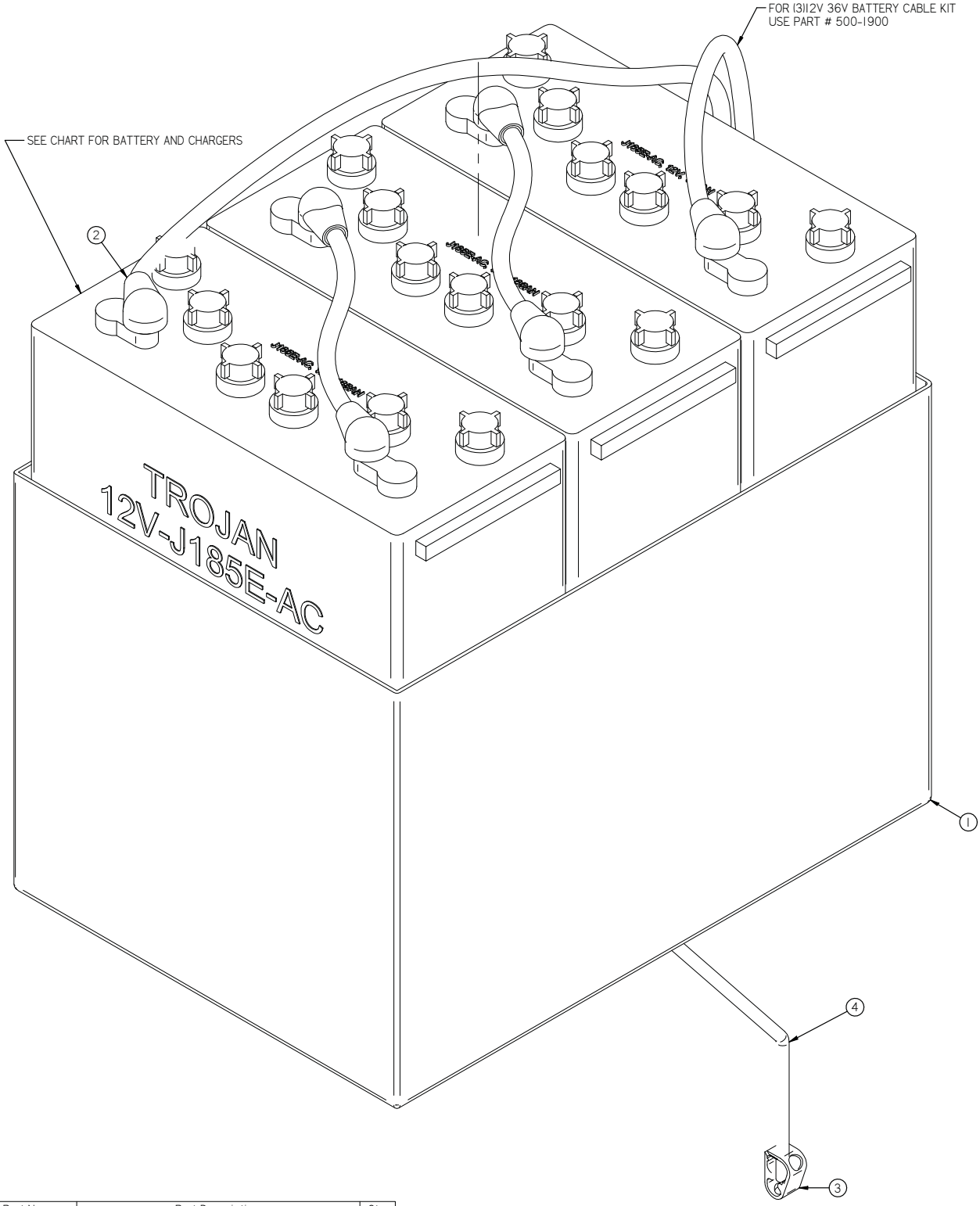

Item	Part No.	Part Description	Qty.
1	270-0001	36V. (3) 12V. BATTERY TRAY	1
2	H-40031	BATTERY BOOT	6
3	M-5031K12	CLAMP STYLE PINCH VALVE	1
4	T-031B1450	BATTERY DRAIN HOSE	1

WHICH BATTERY CHARGER TO USE WITH BATTERY SELECTION				
Battery Part Number & Description	Off-Board Charger North American	Off-Board Charger Export	On-Board Charger North American	On-Board Charger Export
STANDARD 253-2110 (12V, 175 AH) WET	250-2540	250-2447	250-2441	
OPTIONAL 270-2110 (12V, 225 AH) WET	250-2540	250-2447	250-2441	
OPTIONAL 253-2120 (12V 215 AH) AGM	250-2447	250-2447		

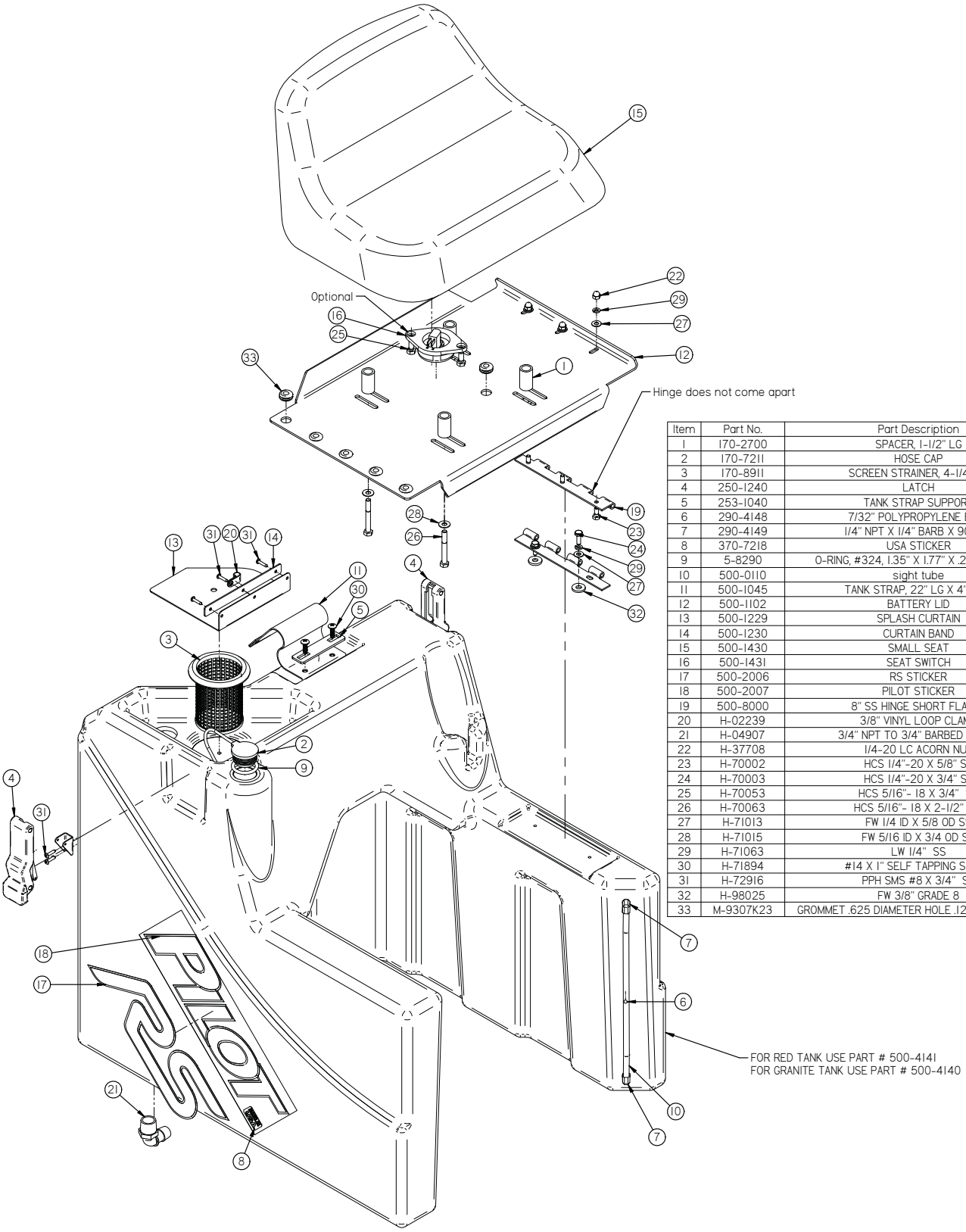

Item	Part No.	Part Description	Qty.
1	170-2700	SPACER, 1-1/2" LG	4
2	170-7211	HOSE CAP	1
3	170-8911	SCREEN STRAINER, 4-1/4" LG	1
4	250-1240	LATCH	2
5	253-1040	TANK STRAP SUPPORT	1
6	290-4148	7/32" POLYPROPYLENE BALL	1
7	290-4149	1/4" NPT X 1/4" BARB X 90 DEG	2
8	370-7218	USA STICKER	2
9	5-8290	O-RING, #324, 1.35" X 1.77" X .210" BUNA-N	1
10	500-0110	sight tube	1
11	500-1045	TANK STRAP, 22" LG X 4" WIDE	1
12	500-1102	BATTERY LID	1
13	500-1229	SPLASH CURTAIN	1
14	500-1230	CURTAIN BAND	1
15	500-1430	SMALL SEAT	1
16	500-1431	SEAT SWITCH	1
17	500-2006	RS STICKER	1
18	500-2007	PILOT STICKER	2
19	500-8000	8" SS HINGE SHORT FLANGE	1
20	H-02239	3/8" VINYL LOOP CLAMP	1
21	H-04907	3/4" NPT TO 3/4" BARBED ELBOW	1
22	H-37708	1/4-20 LC ACORN NUT	3
23	H-70002	HCS 1/4"-20 X 5/8" SS	3
24	H-70003	HCS 1/4"-20 X 3/4" SS	2
25	H-70053	HCS 5/16"- 18 X 3/4" SS	2
26	H-70063	HCS 5/16"- 18 X 2-1/2" SS	4
27	H-71013	FW 1/4 ID X 5/8 OD SS	5
28	H-71015	FW 5/16 ID X 3/4 OD SS	4
29	H-71063	LW 1/4" SS	5
30	H-71894	#14 X 1" SELF TAPPING SCREW	2
31	H-72916	PPH SMS #8 X 3/4" SS	7
32	H-98025	FW 3/8" GRADE 8	2
33	M-9307K23	GROMMET .625 DIAMETER HOLE .125 THICK PANEL	6

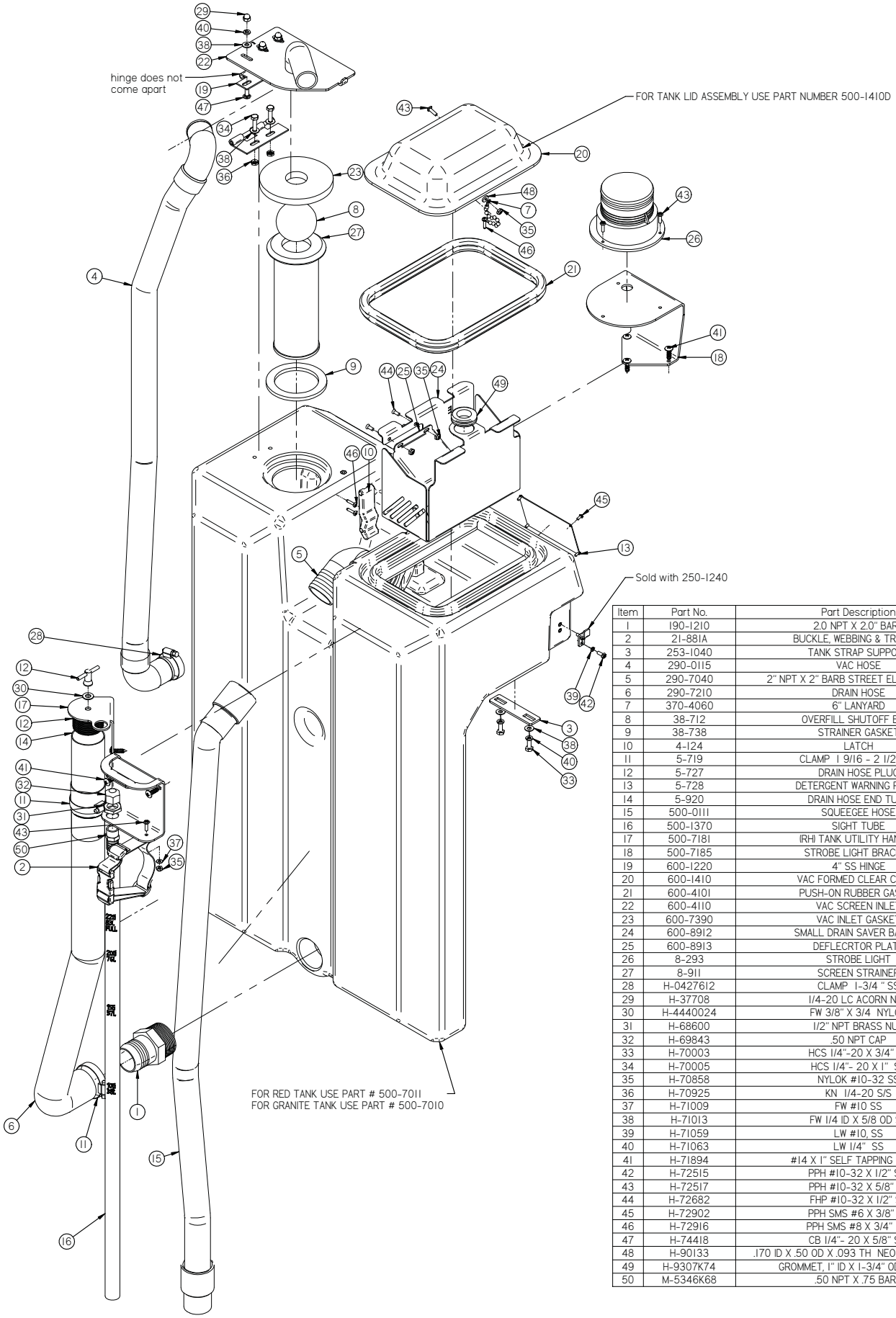

Item	Part No.	Part Description	Qty.
1	190-1210	2.0 NPT X 2.0" BARB	1
2	21-881A	BUCKLE, WEBBING & TRIGLIDE	1
3	253-1040	TANK STRAP SUPPORT	1
4	290-0115	VAC HOSE	1
5	290-7040	2" NPT X 2" BARB STREET ELBOW, BLACK	1
6	290-7210	DRAIN HOSE	1
7	370-4060	6" LANYARD	1
8	38-712	OVERFILL SHUTOFF BALL	1
9	38-738	STRAINER GASKET	1
10	4-124	LATCH	1
11	5-719	CLAMP 1 9/16 - 2 1/2 " SS	2
12	5-727	DRAIN HOSE PLUG	1
13	5-728	DETERGENT WARNING PLATE	1
14	5-920	DRAIN HOSE END TUBE	1
15	500-0111	SQUEEGEE HOSE	1
16	500-1370	SIGHT TUBE	1
17	500-7181	(RH) TANK UTILITY HANDLE	1
18	500-7185	STROBE LIGHT BRACKET	1
19	600-1220	4" SS HINGE	1
20	600-1410	VAC FORMED CLEAR COVER	1
21	600-4101	PUSH-ON RUBBER GASKET	1
22	600-4110	VAC SCREEN INLET	1
23	600-7390	VAC INLET GASKET	1
24	600-8912	SMALL DRAIN SAVER BASKET	1
25	600-8913	DEFLECRTOR PLATE	1
26	8-293	STROBE LIGHT	1
27	8-911	SCREEN STRAINER	1
28	H-0427612	CLAMP 1-3/4 " SS	1
29	H-37708	1/4-20 LC ACORN NUT	3
30	H-4440024	FW 3/8" X 3/4 NYLON	1
31	H-68600	1/2" NPT BRASS NUT	1
32	H-69843	.50 NPT CAP	1
33	H-70003	HCS 1/4"-20 X 3/4" SS	2
34	H-70005	HCS 1/4"- 20 X 1" SS	2
35	H-70858	NYLOK #10-32 SS	7
36	H-70925	KN 1/4-20 S/S	2
37	H-71009	FW #10 SS	1
38	H-71013	FW 1/4 ID X 5/8 OD SS	7
39	H-71059	LW #10, SS	4
40	H-71063	LW 1/4" SS	5
41	H-71894	#14 X 1" SELF TAPPING SCREW	6
42	H-72515	PPH #10-32 X 1/2" S/S	4
43	H-72517	PPH #10-32 X 5/8" SS	5
44	H-72682	FHP #10-32 X 1/2" SS	2
45	H-72902	PPH SMS #6 X 3/8" SS	4
46	H-72916	PPH SMS #8 X 3/4" SS	3
47	H-74418	CB 1/4"- 20 X 5/8" S/S	3
48	H-90133	.170 ID X .50 OD X .093 TH NEOPRENE WASHER	1
49	H-9307K74	GROMMET, 1" ID X 1-3/4" OD BUNA-N	1
50	M-5346K68	.50 NPT X .75 BARB	1

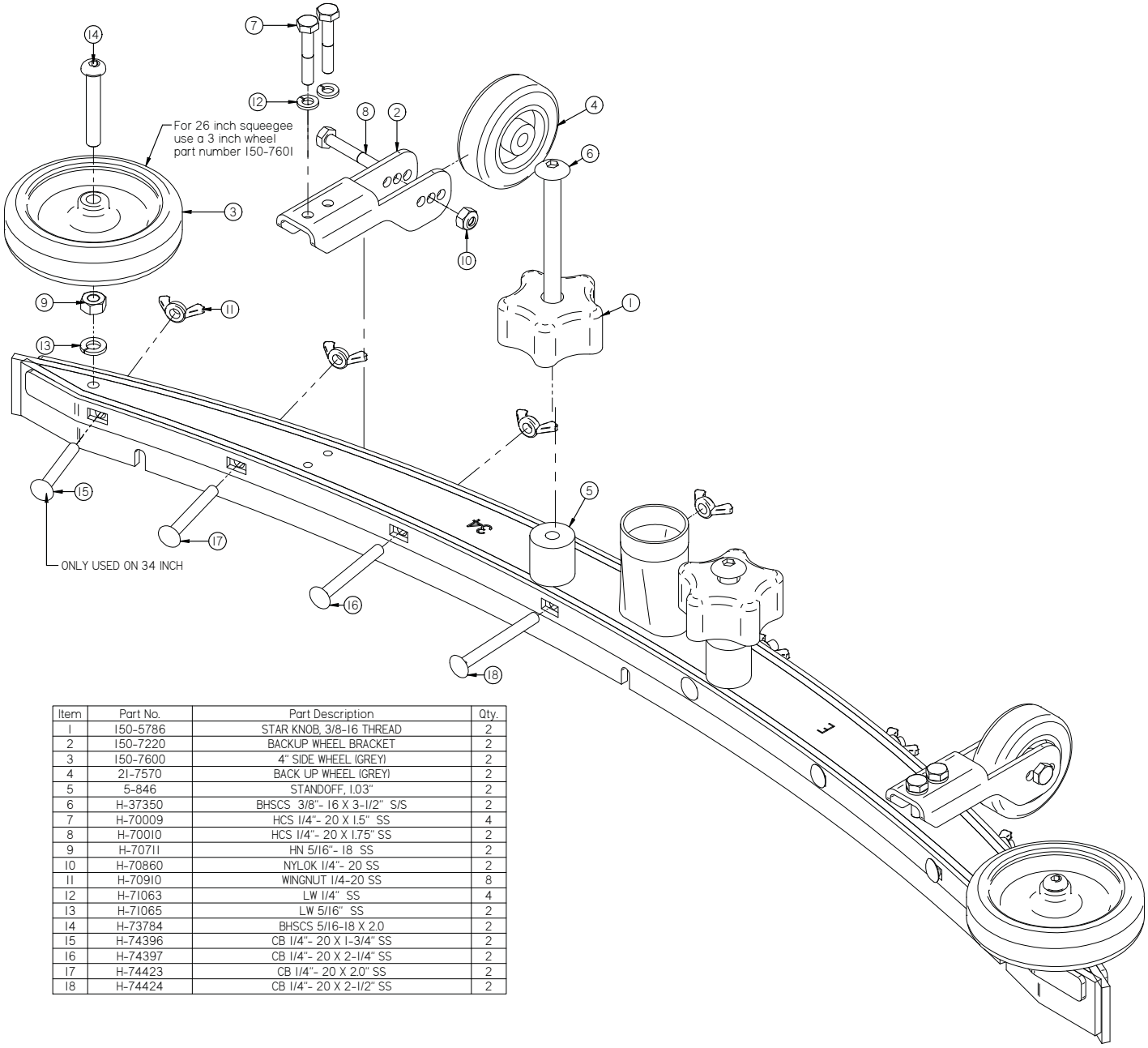

Item	Part No.	Part Description	Qty.
1	150-5786	STAR KNOB, 3/8-16 THREAD	2
2	150-7220	BACKUP WHEEL BRACKET	2
3	150-7600	4" SIDE WHEEL (GREY)	2
4	21-7570	BACK UP WHEEL (GREY)	2
5	5-846	STANDOFF, 1.03"	2
6	H-37350	BHSCS 3/8"- 16 X 3-1/2" S/S	2
7	H-70009	HCS 1/4"- 20 X 1.5" SS	4
8	H-70010	HCS 1/4"- 20 X 1.75" SS	2
9	H-70711	HN 5/16"- 18 SS	2
10	H-70860	NYLOK 1/4"- 20 SS	2
11	H-70910	WINGNUT 1/4-20 SS	8
12	H-71063	LW 1/4" SS	4
13	H-71065	LW 5/16" SS	2
14	H-73784	BHSCS 5/16-18 X 2.0	2
15	H-74396	CB 1/4"- 20 X 1-3/4" SS	2
16	H-74397	CB 1/4"- 20 X 2-1/4" SS	2
17	H-74423	CB 1/4"- 20 X 2.0" SS	2
18	H-74424	CB 1/4"- 20 X 2-1/2" SS	2

Squeegee body blades and bands									
Squeegee size	Squeegee Body	Linatex front Squeegee blade	Gum Rubber front Squeegee blade	Urethane front Squeegee blade	Front squeegee band	Linatex Rear Squeegee blade	Linatex rear Squeegee blade	Urethane rear Squeegee blade	Rear Squeegee band
26 inch Squeegee	130-7181	130-755L	130-755G	130-755U	130-7170	130-754L	130-754G	130-754U	130-7160
30 inch Squeegee	150-7181	150-755L	150-755G	150-755U	150-7170	150-754L	150-754G	150-754U	150-7160
34 inch Squeegee	180-7181	180-755L	180-755G	150-755U	180-7170	180-754L	180-754G	180-754U	180-7160

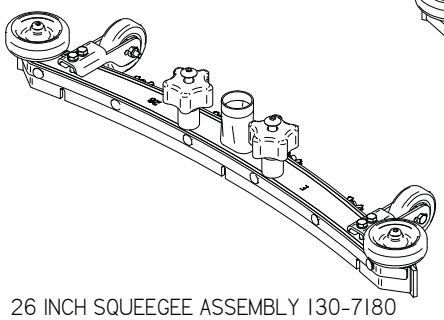

26 INCH SQUEEGEE ASSEMBLY 130-7180

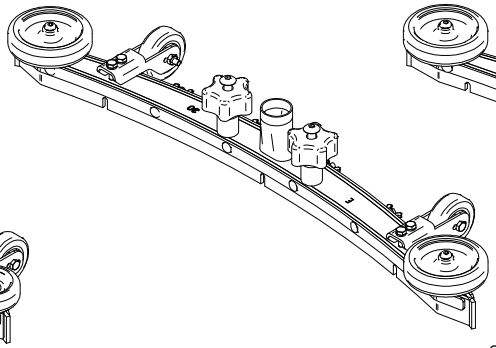

30 INCH SQUEEGEE ASSEMBLY 150-7180

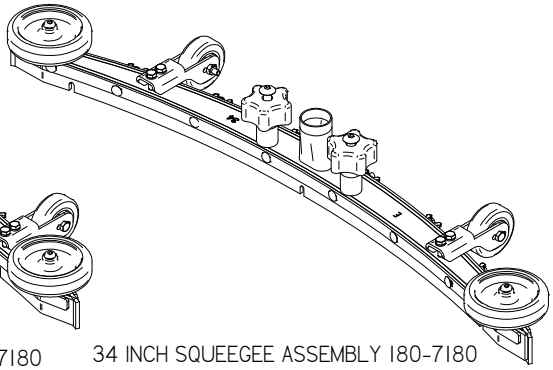

34 INCH SQUEEGEE ASSEMBLY 180-7180

ROUND DISK BRUSHES:

NOTICE

The ## in Disk Column Denotes Desk Pad Size: 13", 14" or 20"

BRUSHES	DISK	LEVEL
Super Grit	##-421SS	Very High
Tough Grit	##-421S	High
Midi Grit	##-421C	Medium
Light Grit	##-421PS	Moderate
Poly (.028)	##-421P	Light
Nylon (.016)	##-421N	Light
Tampico	##-421T	Light
Pad Driver	##-421D	
Diamond Driver	##-421DD	

ROUND DISK PADS:

NOTICE

The ## in Disk Column Denotes Desk Pad Size: 13", 14" or 20"

DISK PADS	DISK	LEVEL	COLOR
Super Black	##-422BB	Very High	Black
Black	##-422B	High	Black
Brown	##-422BR	High	Brown
Green	##-422G	Medium	Green
Blue	##-422BL	Moderate	Blue
Red	##-422R	Moderate	Red
White	##-422W	Light	White

EDGE PADS AND SCREENS:

DESCRIPTION	24"×14" SCRUBDECK	28"×14" SCRUBDECK
White Pad	N/A	EDGE-4054
Red Pad	EDGE-2404	EDGE-4053
Blue Pad	EDGE-2403	EDGE-4052
Green Pad	EDGE-2402	EDGE-4051
Black Pad	EDGE-2401	EDGE-4050
White Driver Pad	N/A	EDGE-4058
60 Grit Sand Screen	N/A	EDGE-4059
80 Grit Sand Screen	N/A	EDGE-4060
100 Grit Sand Screen	N/A	EDGE-4061
120 Grit Sand Screen	N/A	EDGE-4062
150 Grit Sand Screen	N/A	EDGE-4063
20 Grit Sand Paper	N/A	N/A
36 Grit Sand Paper	N/A	N/A
60 Grit Sand Paper	N/A	N/A
80 Grit Sand Paper	N/A	N/A
100 Grit Sand Paper	N/A	N/A
400 Grit Diamond Polishing Pad	N/A	EDGE-4013
800 Grit Diamond Polishing Pad	N/A	EDGE-4014
1500 Grit Diamond Polishing Pad	N/A	EDGE-4015
3000 Grit Diamond Polishing Pad	N/A	EDGE-4016
6000 Grit Diamond Polishing Pad	N/A	EDGE-4070
Tile/Grout Renovator Pad	N/A	EDGE-4048
Dominator HD Strip Pad	N/A	EDGE-4055
Maroon ECO Prep Pad	EDGE-2407	EDGE-4056

SQUEEGEE BLADE KITS & COMPLETE SQUEEGEE ASSEMBLIES:

SQUEEGEE SIZE	20" DISK DECKS	24" EDGE DECKS	26" DISK DECKS	28" EDGE DECKS	28" DISK DECKS
26" Squeegee	Optional	Optional	Optional	Optional	Optional
30" Squeegee	Standard	Optional	Optional	Optional	Optional
34" Squeegee	Optional	Standard	Standard	Standard	Standard

SQUEEGEE SIZE	GUM RUBBER BLADE KIT	LINATEX BLADE KIT	URETHANE BLADE KIT	COMPLETE SQUEEGEE ASSEMBLIES
26" Squeegee	130-770G	130-770L	130-770U	130-7180
30" Squeegee	150-770G	150-770L	150-770U	150-7180
34" Squeegee	180-770G	180-770L	180-770U	180-7180

SQUEEGEE MATERIAL:	USED FOR:
LINATEX	Provides best wear and tear resistant. Not designed for use with chemicals.
URETHANE	Provides best resistance when dealing with harsh chemicals, oils, fuels, etc.
GUM	Provides best drying preformance on rough/grouted floor types by sealing over irregularities.

NOTICE

Squeegee blade kits include (1) Rear Blade, (1) Front Blade, and (2) Backup Wheels with hardware.

NOTICE

Squeegee Assemblies (complete) listed above all come with Linatex blades.

NOTICE

Size is stamped into the top of the painted steel squeegee body on all squeegee's.

NOTICE

The 26" squeegee is designed for narrow aisles and may not have the same water control around tight turns as the large squeegees.

BLANK

THIS PAGE WAS INTENTIONALLY LEFT BLANK

BLANK

THIS PAGE WAS INTENTIONALLY LEFT BLANK

1711 South Street
Racine, WI 53404
www.tomcatequip.com
Tel. US: 800-450-9824
Tel. Int: (001) 262-681-6470

© RPS Corporation 2014